DocuSign Envelope ID: 6E3D8B20-E45B-4FE9-AFBA-E0D9D0922DF7

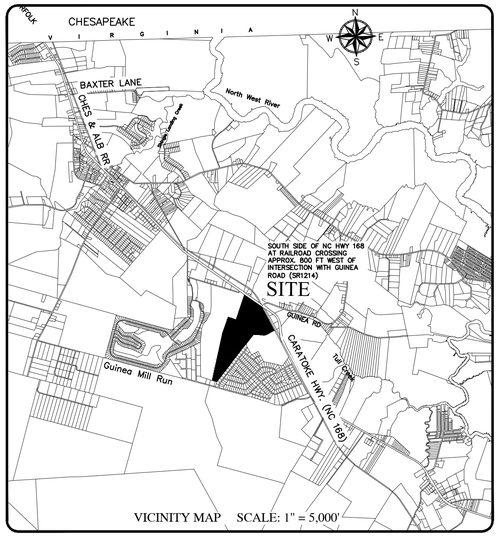

VICINITY MAP SCALE: 1" = 5,000'

THE FOST TRACT

PLANNED DEVELOPMENT - RESIDENTIAL

CONSTRUCTION RECORD DRAWINGS- PHASE 4

MOYOCK TOWNSHIP CURRITUCK COUNTY NORTH CAROLINA

GENERAL NOTES:

1. PROJECT NAME: THE FOST TRACT – PLANNED DEVELOPMENT – RESIDENTIAL – CONSTRUCTION PHASE 4
2. APPLICANT: FOST TRACT, LLC
   417–D CARATOKE HIGHWAY
   MOYOCK, NC 27958
3. ALL SURVEY DATA IS REFERENCED TO NAD 83 NORTH CAROLINA STATE PLANE HORIZONTAL COORDINATE SYSTEM AND THE NAVD 1988 VERTICAL DATUM.
4. F.I.R.M. DATA:
   ZONE X PER F.I.R.M. MAP NO.S 3721803100 K, 37218030000 K, & 3721804000 K ALL HAVING AN EFFECTIVE DATE OF DECEMBER 21, 2018. USE OF LAND WITHIN A FLOODWAY OR FLOOD PLAIN IS SUBSTANTIALLY RESTRICTED BY CHAPTER 7 OF CURRITUCK COUNTY'S UNIFIED DEVELOPMENT ORDINANCE.
5. THESE CONSTRUCTION RECORD DRAWINGS AREA BASED ON A COMBINATION OF ACTUAL FIELD SURVEYS AND FIELD OBSERVATIONS PERFORMED BY BISSELL PROFESSIONAL GROUP AS WELL AS INFORMATION PROVIDED BY THE PROJECT'S CONSTRUCTION CONTRACTORS AND THE CURRITUCK COUNTY WATER DEPARTMENT. ANY SITE MODIFICATIONS MADE AFTER THE LAST FIELD SURVEY ARE NOT REPRESENTED IN THESE DRAWINGS. CONTRIBUTING FIELD SURVEYS WERE CONDUCTED ON THE FOLLOWING DATES:
   - 11–01–23
   - 11–02–23
   - 11–03–23
   - 11–07–23
   - 11–13–23
   - 11–14–23

AS–BUILT SURVEY

I HEREBY CERTIFY THAT ALL IMPROVEMENTS FOR THIS SUBDIVISION HAVE BEEN INSTALLED ACCORDING TO THE PLANS PREPARED BY BISSELL PROFESSIONAL GROUP AND APPROVED BY CURRITUCK COUNTY, EXCEPT THAT A PERFORMANCE GUARANTEE HAS BEEN POSTED WITH CURRITUCK COUNTY GUARANTEEING THAT ALL REMAINING IMPROVEMENTS MUST BE COMPLETED BY THE 16TH DAY OF NOVEMBER, 2025 ACCORDING TO THE PLANS AND SPECIFICATIONS PREPARED BY BISSELL PROFESSIONAL GROUP. FINAL GROUND STABILIZATION OF THE SITE IS ONGOING AND IS NOT INCLUDED IN THIS CERTIFICATION.
REMAINING IMPROVEMENTS INCLUDE:

- SIDEWALKS AND MULTI–USE PATH
- STREET TREES
- FLORA PORTION OF ROWLAND CREEK IMPROVEMENTS
- PERMANENT STREET SIGNS AND NO PARKING SIGNS
- PAVEMENT MARKING
- STREET LIGHTS

11/16/23
DATE

DocuSigned by:
C6DA34EC9CBF428...
REGISTERED LAND SURVEYOR/ENGINEER

L-1756
REGISTRATION NUMBER

PERFORMANCE GUARANTEE

SHOULD THE OWNER OR DEVELOPER FAIL TO COMPLETE INSTALLATION OF THE GUARANTEED IMPROVEMENTS PER APPROVED PLAN WITHIN THE TERM OF THE PERFORMANCE (AS MAY BE EXTENDED), THE DIRECTOR SHALL GIVE THE OWNER OR DEVELOPER 30 DAYS WRITTEN NOTICE OF THE DEFAULT BY CERTIFIED MAIL. AFTER THE 30–DAY NOTICE PERIOD EXPIRES, THE COUNTY MAY DRAW ON THE GUARANTEE AND USE THE FUNDS TO PERFORM WORK NECESSARY TO COMPLETE INSTALLATION OF THE GUARANTEED IMPROVEMENTS. UPON COMPLETION OF SAID WORK, THE COUNTY SHALL PROVIDE AN ACCOUNTING STATEMENT OF THE EXPENDITURES TO THE OWNER OR DEVELOPER AND AS APPLICABLE, THE OWNER OR DEVELOPER SHALL REIMBURSE THE COUNTY IN ORDER TO BE RELEASED OF BOND AND AVOID A WARRANT OF INDEBTEDNESS.

Sheet Number	Sheet Title
1	COVER SHEET
2	ROADWAY & DRAINAGE (A)
3	ROADWAY & DRAINAGE (B)
4	ROADWAY & DRAINAGE (C)
5	ROADWAY & DRAINAGE (D)
6	WATER & SEWER (A)
7	WATER & SEWER (B)
8	WATER & SEWER (C)
9	WATER & SEWER (D)
10	DETAILS
11	DETAILS
12	SOUTHERN RUN PROF
13	PVT-ALLEY-PROF

LEGEND

	ROADWAY CENTERLINE
	RIGHT–OF–WAY
	PROPERTY BOUNDARY
	ADJOINING PROPERTY LINE
	SWALE CENTERLINE
	SWALE/BMP TOP OF BANK
	CULVERT (SIZE, TYPE & INVERTS AS NOTED)
	RECORD WATER DISTRIBUTION MAIN (SIZE AS NOTED)
EWL EWL	EXISTING WATER LINE
	6" FIRE HYDRANT TYPICAL
WTR	WATER VALVE TYPICAL (SIZE AS NOTED)
	WATER SERVICE METER BOX
S	8" GRAVITY SEWER LINE & MANHOLE
D	CATCH BASIN/DROP INLET & STORM PIPE
	SEWER SERVICE CLEANOUT
	DRAINAGE FLOW DIRECTION
F/L	FLOWLINE
EOC	EDGE OF CONCRETE
X 0.00 BPE	BUILDING PAD ELEVATION
X 0.00	SPOT ELEVATION

BISSELL PROFESSIONAL GROUP
Bissell Professional Group
Firm License # C-0593
3512 North Croatan Highway
P.O. Box 1088
Kitty Hawk, North Carolina 27949
(252) 261-3300
FAX (252) 261-1760
Engineers, Planners, Surveyors and Environmental Specialists

COVER SHEET

THIS DOCUMENT IS THE SOLE PROPERTY OF BPG, INC. OF KITTY HAWK, NORTH CAROLINA. THE REPRODUCTION, IN WHOLE OR PART, OR THE MODIFICATION OF ANY DETAIL OR DESIGN IS NOT TO BE MADE WITHOUT THE EXPRESS WRITTEN CONSENT OF MARK S. BISSELL, PRINCIPAL OF BPG, INC., COPYRIGHT 2005.

PROJECT:
THE FOST TRACT PD-R - PHASE 4
MOYOCK TOWNSHIP CURRITUCK COUNTY NORTH CAROLINA
RECORD DRAWINGS - PHASE 4

REVISIONS

NO.	DATE	DESCRIPTION	BY

NORTH CAROLINA PROFESSIONAL SEAL L-1756 LAND SURVEYOR MARK S. BISSELL

DATE: 11-06-23	SCALE: 1" = 30'
DESIGNED:	CHECKED: KFW
DRAWN: AKM	APPROVED: BPG

SHEET: 1 OF 13
CAD FILE: 4651ASB-PH4
PROJECT NO: 4651

S:\projects\4651 Fost Tract\dwg\ASbuilt\Phase 4\4651ASB-PH4.dwg 11/16/2023 Plotted: 11/16/2023 9:02 AM HP Designjet T2500 PS HPGL2.pc3

DocuSign Envelope ID: 6E3D8B20-E45B-4FE9-AFBA-E0D9D0922DF7

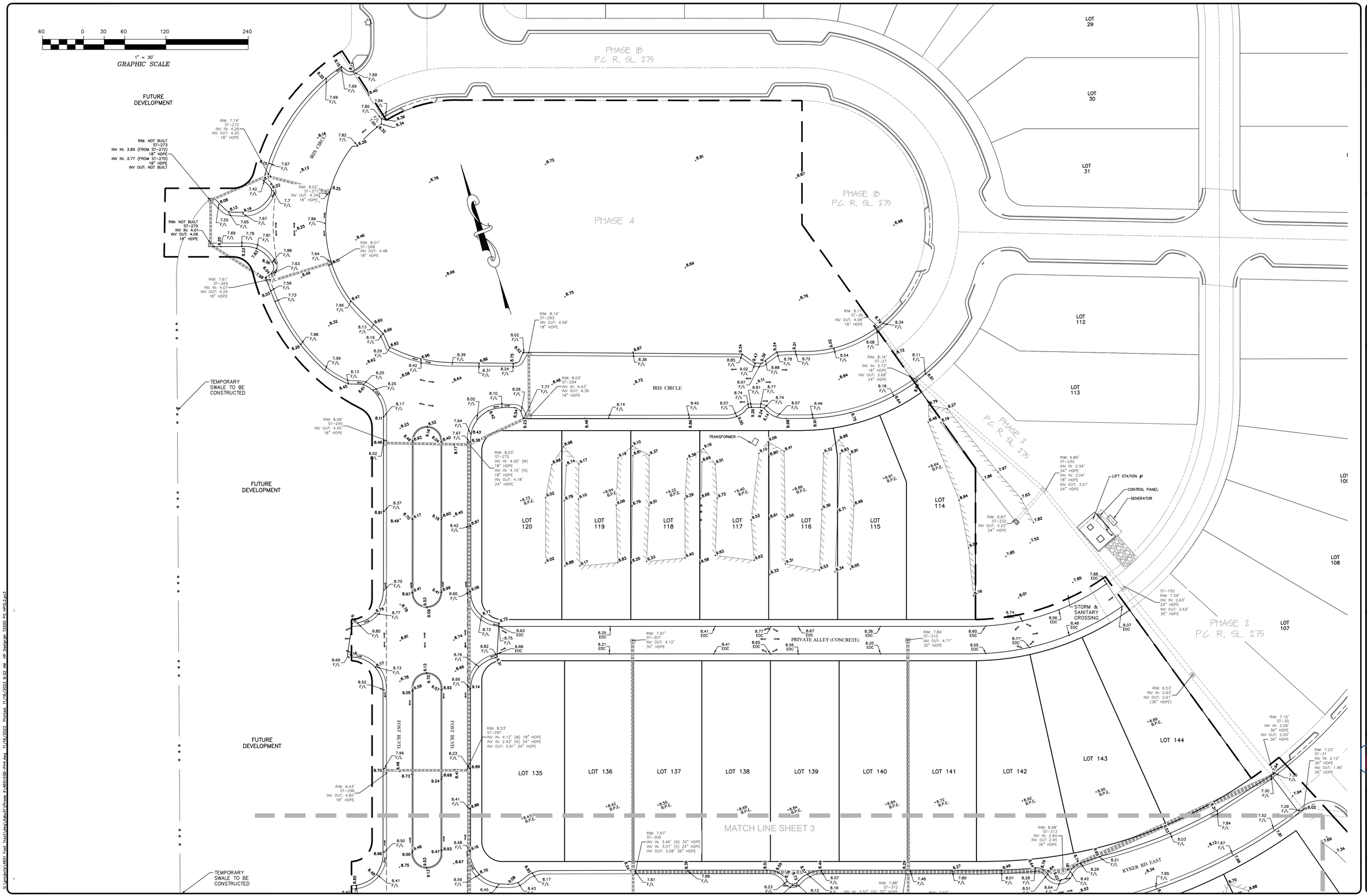

Bissell Professional Group
Firm License # C-0910
3512 North Croatan Highway
P.O. Box 1088
Kitty Hawk, North Carolina 27949
(252) 261-3300
FAX (252) 261-1760
BISSELL PROFESSIONAL GROUP
Engineers, Planners, Surveyors and Environmental Specialists

ROADWAY & DRAINAGE PLAN

THIS DOCUMENT IS THE SOLE PROPERTY OF BPG, INC. OF KITTY HAWK, NORTH CAROLINA. THE REPRODUCTION, IN WHOLE OR PART, OR THE MODIFICATION OF ANY DETAIL OR DESIGN IS NOT TO BE MADE WITHOUT THE EXPRESS WRITTEN CONSENT OF MARK S. BISSELL, PRINCIPAL OF BPG, INC., COPYRIGHT 2005.

PROJECT:

THE FOST TRACT PD-R - PHASE 4

MOYOCK TOWNSHIP CURRITUCK COUNTY NORTH CAROLINA

RECORD DRAWINGS - PHASE 4

REVISIONS

NO.	DATE	DESCRIPTION	BY

NORTH CAROLINA PROFESSIONAL SEAL L-1908 MARK S. BISSELL

DocuSigned by:
CEDA3EC9CEF428...

DATE: 11-06-23	SCALE: 1" = 30'
DESIGNED:	CHECKED: KFW
DRAWN: AKM	APPROVED: BPG

SHEET: 2 OF 13

CAD FILE: 4651ASB-PH4

PROJECT NO: 4651

S:\projects\4651 Fost Tract\Dwg\Abbott\Phase 4\4651ASB-PH4.dwg 11/16/2023 Plotted: 11/16/2023 9:02 AM HP Designjet T2500 PS HPGL2.pc3

DocuSign Envelope ID: 6E3D8B20-E45B-4FE9-AFBA-E0D9D0922DF7

Bissell Professional Group
Firm License # C-0793
3512 North Croatan Highway
P.O. Box 390
Kitty Hawk, North Carolina 27949
(252) 261-3300
FAX (252) 261-1760
BISSELL PROFESSIONAL GROUP
Engineers, Planners, Surveyors and Environmental Specialists

ROADWAY & DRAINAGE PLAN

THIS DOCUMENT IS THE SOLE PROPERTY OF BPG, INC. OF KITTY HAWK, NORTH CAROLINA. THE REPRODUCTION, IN WHOLE OR PART, OR THE MODIFICATION OF ANY DETAIL OR DESIGN IS NOT TO BE MADE WITHOUT THE EXPRESS WRITTEN CONSENT OF MARK S. BISSELL, PRINCIPAL OF BPG, INC., COPYRIGHT 2005.

PROJECT:

THE FOST TRACT PD-R - PHASE 4

MOYOCK TOWNSHIP CURRITUCK COUNTY NORTH CAROLINA

RECORD DRAWINGS - PHASE 4

REVISIONS

NO.	DATE	DESCRIPTION	BY

DocuSigned by:
C6DA34EC9CBF428...

DATE: 11-06-23	SCALE: 1" = 30'
DESIGNED:	CHECKED: KFW
DRAWN: AKM	APPROVED: BPG

SHEET: 3 OF 13

CAD FILE: 4651ASB-PH4

PROJECT NO: 4651

S:\projects\4651 Fost Tract\dwg\Adsoft\Phase 4\4651ASB-ph4.dwg 11/16/2023 Plotted: 11/16/2023 9:02 AM HP Designjet T2500 PS HPGL2.pc3

DocuSign Envelope ID: 6E3D8B20-E45B-4FE9-AFBA-E0D9D0922DF7

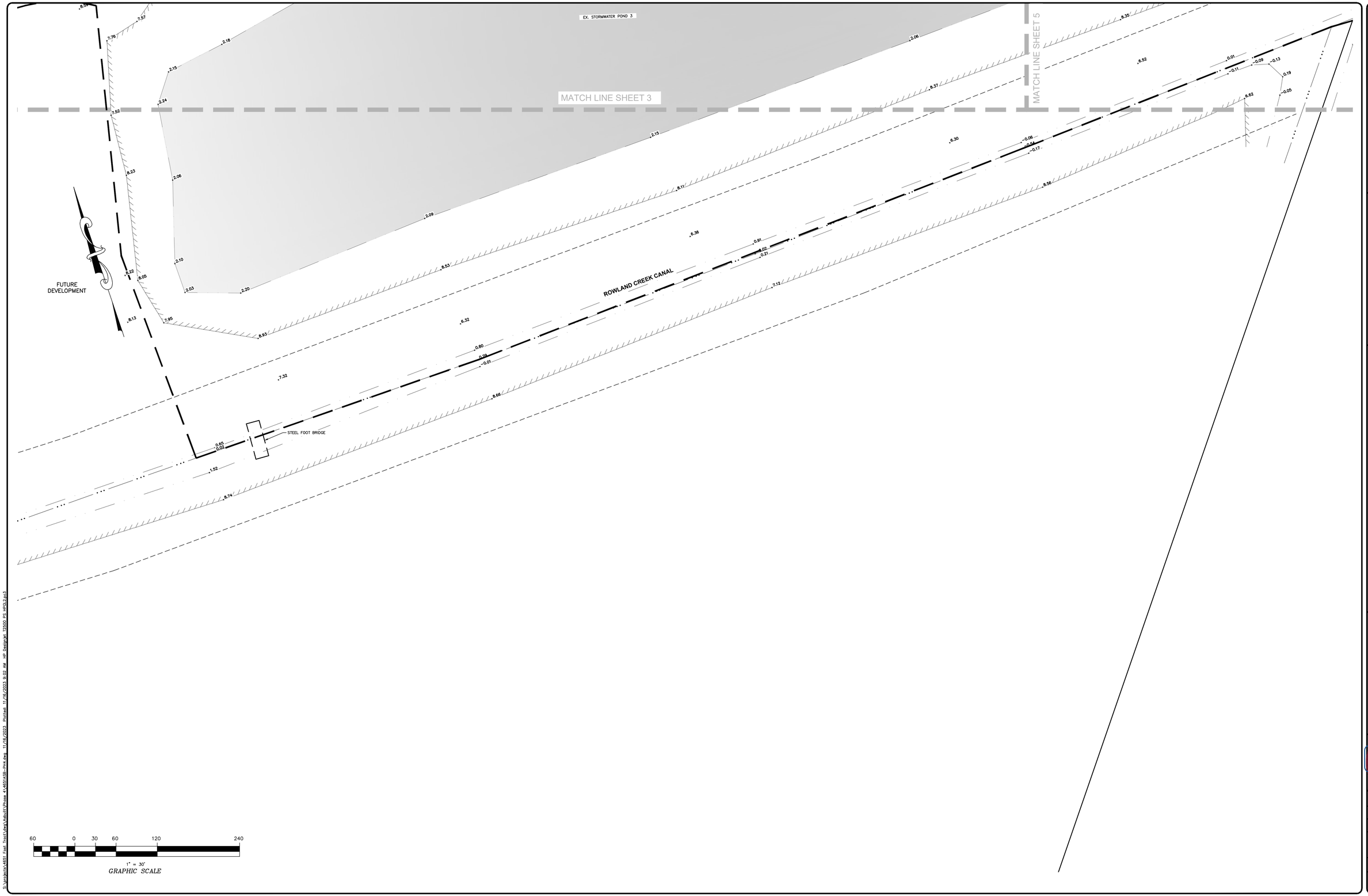

Bissell Professional Group
Firm License # C-0793
3512 North Croatan Highway
P.O. Box 1088
Kitty Hawk, North Carolina 27949
(252) 261-3300
FAX (252) 261-1760
BISSELL PROFESSIONAL GROUP
Engineers, Planners, Surveyors and Environmental Specialists

ROADWAY & DRAINAGE PLAN

THIS DOCUMENT IS THE SOLE PROPERTY OF BPG, INC. OF KITTY HAWK, NORTH CAROLINA. THE REPRODUCTION, IN WHOLE OR IN PART, OR THE MODIFICATION OF ANY DETAIL OR DESIGN IS NOT TO BE MADE WITHOUT THE EXPRESS WRITTEN CONSENT OF MARK S. BISSELL, PRINCIPAL OF BPG, INC., COPYRIGHT 2005.

PROJECT:
THE FOST TRACT PD-R - PHASE 4
MOYOCK TOWNSHIP CURRITUCK COUNTY NORTH CAROLINA
RECORD DRAWINGS - PHASE 4

REVISIONS

NO.	DATE	DESCRIPTION	BY

DocuSigned by:
C8DA34EC9DBF428...

NORTH CAROLINA PROFESSIONAL SEAL L-1708 MICHAEL D. BARR REGISTERED LAND SURVEYOR

DATE: 11-06-23	SCALE: 1" = 30'
DESIGNED:	CHECKED: KFW
DRAWN: AKM	APPROVED: BPG

SHEET: 4 OF 13
CAD FILE: 4651ASB-PH4
PROJECT NO: 4651

S:\projects\4651 Fost Tract\dwg\Abbult\Phase 4\4651ASB-PH4.dwg 11/16/2023 Plotted: 11/16/2023 9:02 AM HP Designjet T2500 PS HPGL2.pc3

DocuSign Envelope ID: 6E3D8B20-E45B-4FE9-AFBA-E0D9D0922DF7

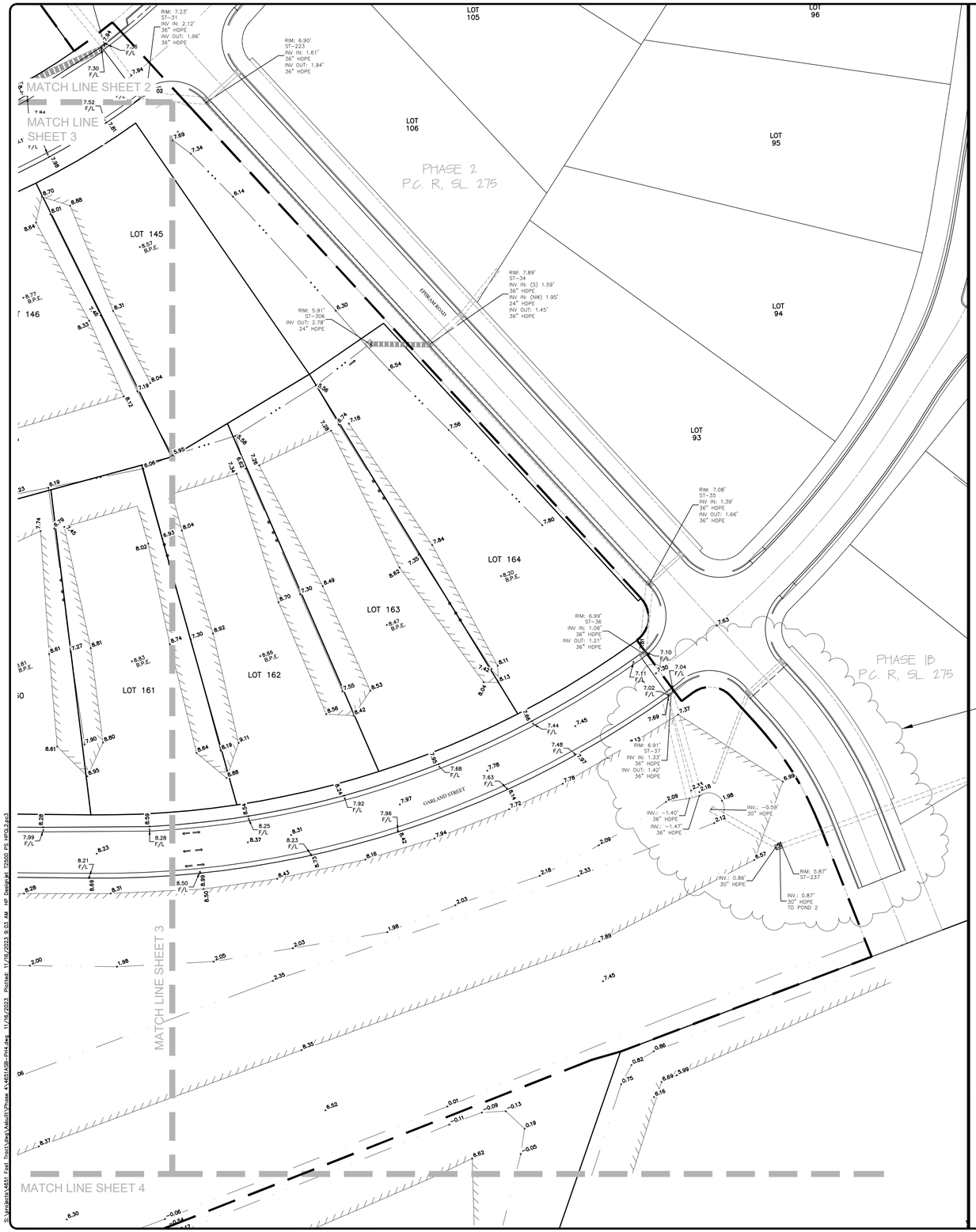

INFRASTRUCTURE APPROVED WITH FOST PHASE 1B & 2

60 0 30 60 120 240

1" = 30'
GRAPHIC SCALE

Bissell Professional Group
Firm License # C-0910
3512 North Croatan Highway
P.O. Box 390
Kitty Hawk, North Carolina 27949
(252) 261-3300
FAX (252) 261-1760
BISSELL PROFESSIONAL GROUP
Engineers, Planners, Surveyors and Environmental Specialists

ROAD WAY & DRAINAGE PLAN

THIS DOCUMENT IS THE SOLE PROPERTY OF BPG, INC. OF KITTY HAWK, NORTH CAROLINA. THE REPRODUCTION, IN WHOLE OR PART, OR THE MODIFICATION OF ANY DETAIL OR DESIGN IS NOT TO BE MADE WITHOUT THE EXPRESS WRITTEN CONSENT OF MARK S. BISSELL, PRINCIPAL OF BPG, INC., COPYRIGHT 2005.

PROJECT:
THE FOST TRACT PD-R - PHASE 4
MOYOCK TOWNSHIP CURRITUCK COUNTY NORTH CAROLINA
RECORD DRAWINGS - PHASE 4

REVISIONS

NO.	DATE	DESCRIPTION	BY

NORTH CAROLINA PROFESSIONAL SEAL 042410 MARK S. BISSELL

DocuSigned by:
C6DA34EC9CBF428...

DATE: 11-06-23	SCALE: 1" = 30'
DESIGNED:	CHECKED: KFW
DRAWN: AKM	APPROVED: BPG

SHEET: 5 OF 13
CAD FILE: 4651ASB-PH4
PROJECT NO: 4651

DocuSign Envelope ID: 6E3D8B20-E45B-4FE9-AFBA-E0D9D0922DF7

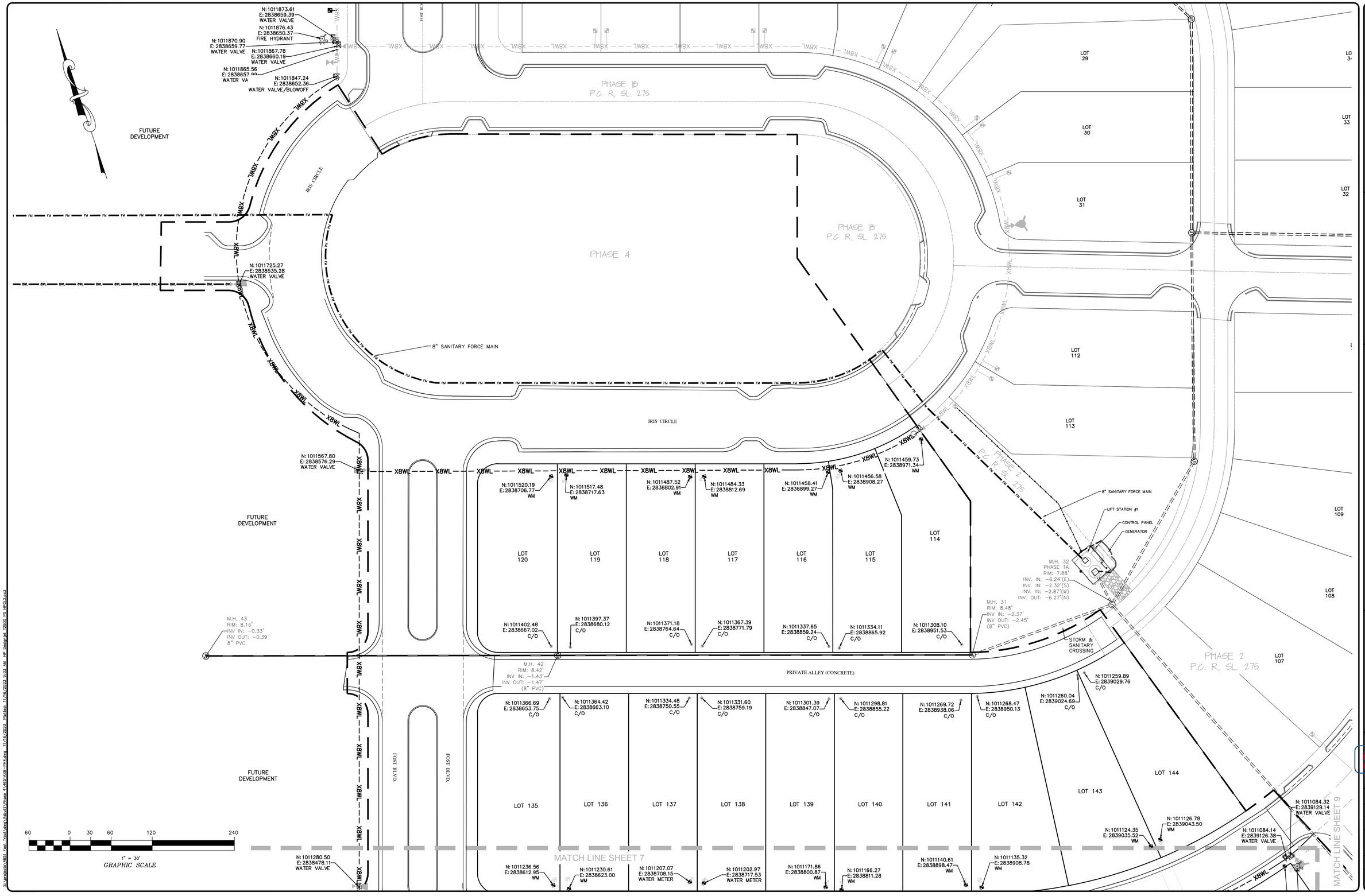

Bissell Professional Group
Firm License # C-0265
3512 North Croatan Highway
P.O. Box 1888
Kitty Hawk, North Carolina 27949
(252) 261-3300
FAX (252) 261-1760
BISSELL PROFESSIONAL GROUP
Engineers, Planners, Surveyors and Environmental Specialists

WASTE WATER & SANITARY SEWER PLAN

THIS DOCUMENT IS THE SOLE PROPERTY OF BPG, INC. OF KITTY HAWK, NORTH CAROLINA. THE REPRODUCTION, IN WHOLE OR PART, OR THE MODIFICATION OF ANY DETAIL OR DESIGN IS NOT TO BE MADE WITHOUT THE EXPRESS WRITTEN CONSENT OF MARK S. BISSELL, PRINCIPAL OF BPG, INC., COPYRIGHT 2005.

PROJECT:
THE FOST TRACT PD-R - PHASE 4
MOYOCK TOWNSHIP CURRITUCK COUNTY NORTH CAROLINA
RECORD DRAWINGS - PHASE 4

REVISIONS

NO.	DATE	DESCRIPTION	BY

DocuSigned by:
C6DA24EC9CBF428...

DATE: 11-06-23	SCALE: 1" = 30'
DESIGNED:	CHECKED: KFW
DRAWN: AKM	APPROVED: BPG
SHEET: 6 OF 13	
CAD FILE: 4651ASB-PH4	
PROJECT NO: 4651	

DocuSign Envelope ID: 6E3D8B20-E45B-4FE9-AFBA-E0D9D0922DF7

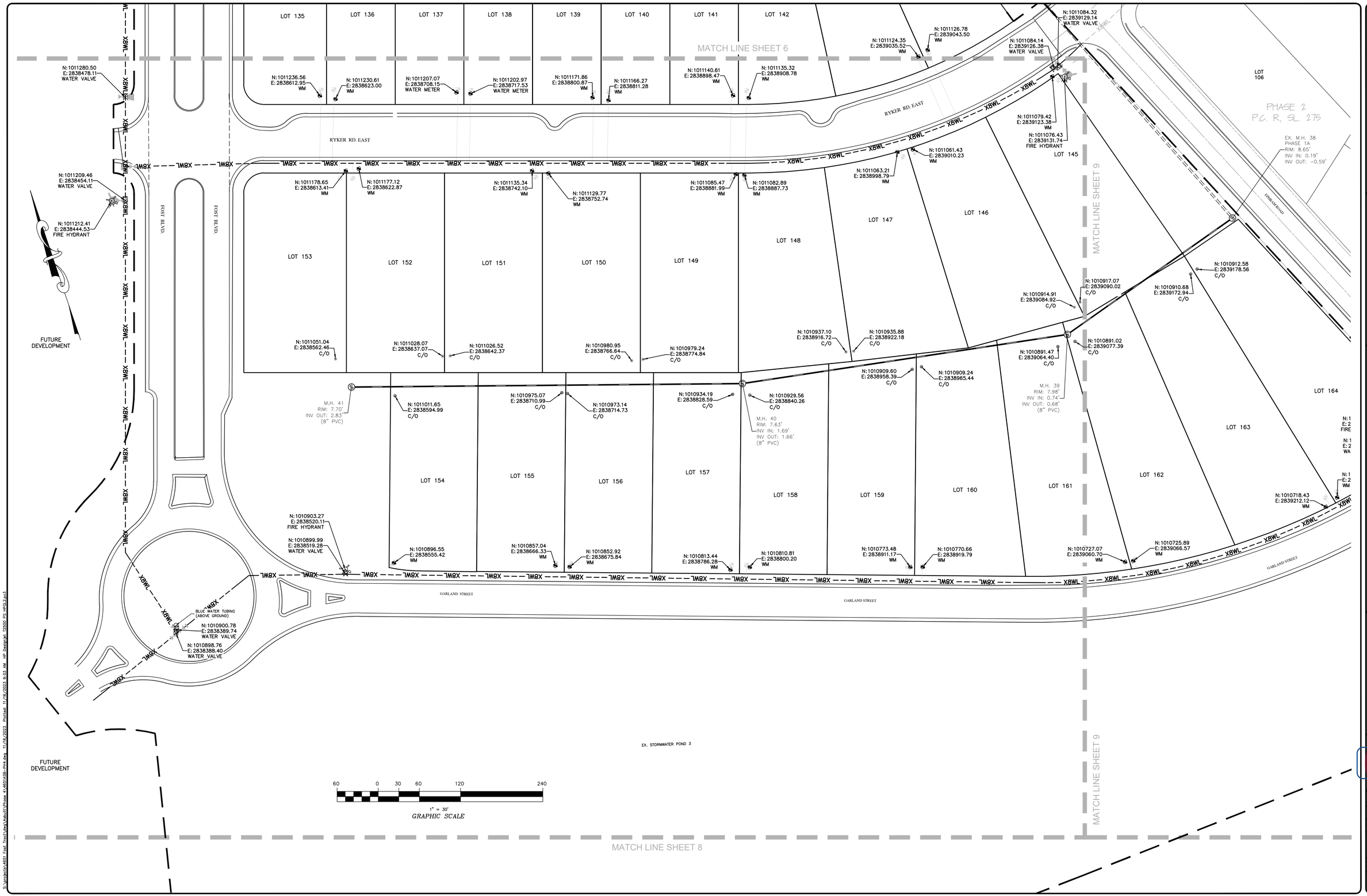

Bissell Professional Group
Firm License # C-0910
3512 North Croatan Highway
P.O. Box 390, EMB
Kitty Hawk, North Carolina 27949
(252) 261-3396
FAX (252) 261-1760
BISSELL PROFESSIONAL GROUP
Engineers, Planners, Surveyors and Environmental Specialists

WASTE WATER & SANITARY SEWER PLAN

THIS DOCUMENT IS THE SOLE PROPERTY OF BPG, INC. OF KITTY HAWK, NORTH CAROLINA. THE REPRODUCTION, IN WHOLE OR PART, OR THE MODIFICATION OF ANY DETAIL OR DESIGN IS NOT TO BE MADE WITHOUT THE EXPRESS WRITTEN CONSENT OF MARK S. BISSELL, PRINCIPAL OF BPG, INC., COPYRIGHT 2005.

PROJECT:
THE FOST TRACT PD-R - PHASE 4
MOYOCK TOWNSHIP CURRITUCK COUNTY NORTH CAROLINA
RECORD DRAWINGS - PHASE 4

REVISIONS

NO.	DATE	DESCRIPTION	BY

NORTH CAROLINA PROFESSIONAL SEAL 049 MARK S. BISSELL

DocuSigned by:
C6DA34EC9CBF428...

DATE: 11-06-23	SCALE: 1" = 30'
DESIGNED:	CHECKED: KFW
DRAWN: AKM	APPROVED: BPG

SHEET: 7 OF 13
CAD FILE: 4651ASB-PH4
PROJECT NO: 4651

S:\projects\4651 Fost Tract\dwg\4651ASB-PH4.dwg 11/16/2023 Plotted: 11/16/2023 9:03 AM HP Designjet T2500 PS HPGL2.pc3

DocuSign Envelope ID: 6E3D8B20-E45B-4FE9-AFBA-E0D9D0922DF7

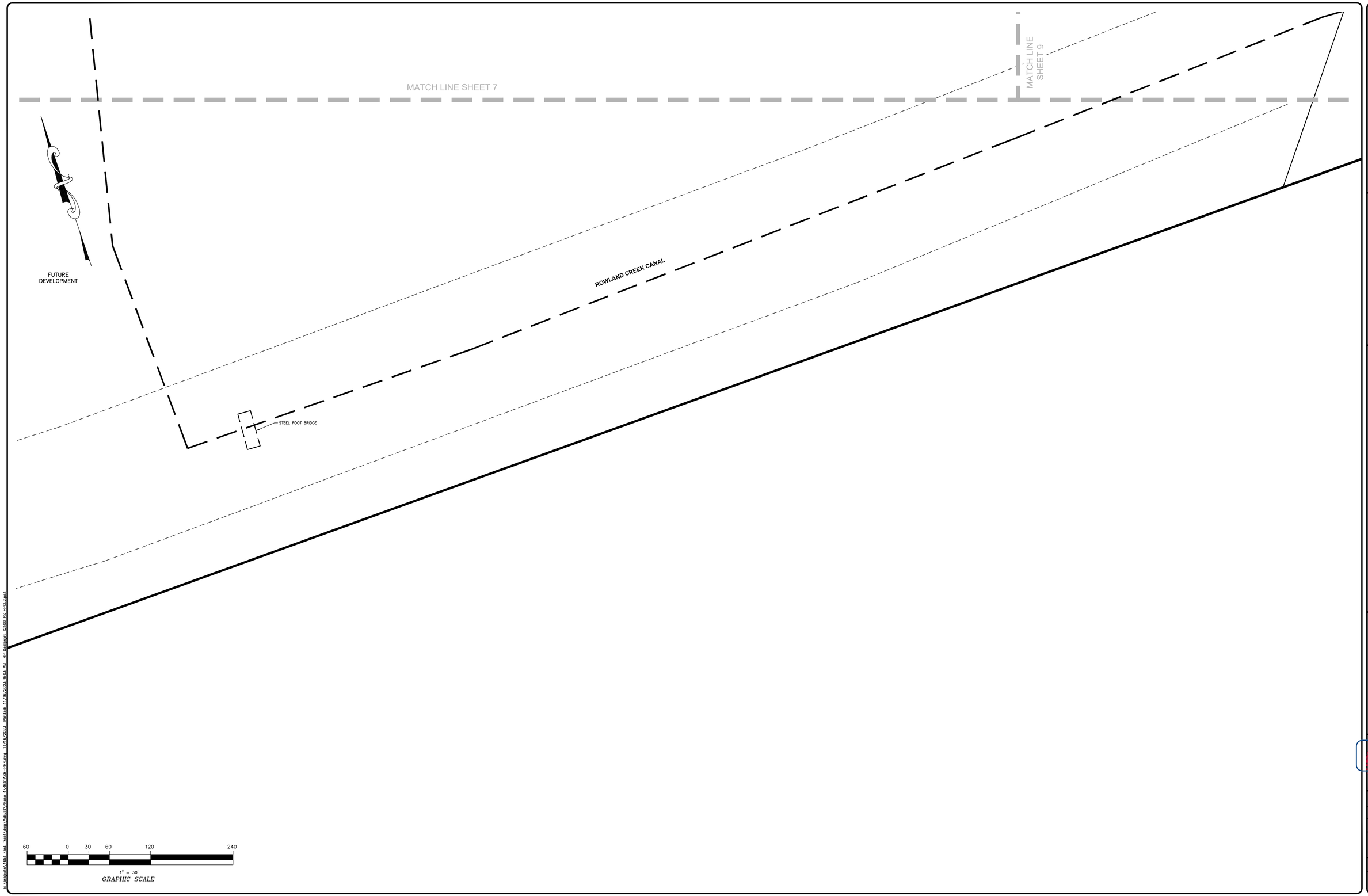

S:\projects\4651 Fost Tract\dwg\Adult\Phase 4\4651ASB-PH4.dwg 11/16/2023 Plotted: 11/16/2023 9:03 AM HP Designjet T2500 PS HPGL2.pc3

Bissell Professional Group
Firm License # C-0265
3512 North Croatan Highway
P.O. Box 390
Kitty Hawk, North Carolina 27949
(252) 261-3300
FAX (252) 261-1760
BISSELL PROFESSIONAL GROUP
Engineers, Planners, Surveyors and Environmental Specialists

WASTE WATER & SANITARY SEWER PLAN

THIS DOCUMENT IS THE SOLE PROPERTY OF BPG, INC. OF KITTY HAWK, NORTH CAROLINA. THE REPRODUCTION, IN WHOLE OR PART, OR THE MODIFICATION OF ANY DETAIL OR DESIGN IS NOT TO BE MADE WITHOUT THE EXPRESS WRITTEN CONSENT OF MARK S. BISSELL, PRINCIPAL OF BPG, INC., COPYRIGHT 2005.

PROJECT:
THE FOST TRACT PD-R - PHASE 4
MOYOCK TOWNSHIP CURRITUCK COUNTY NORTH CAROLINA

RECORD DRAWINGS - PHASE 4

REVISIONS

NO.	DATE	DESCRIPTION	BY

DocuSigned by:
C6DA34EC9CBF428...
NORTH CAROLINA PROFESSIONAL SEAL L-1756 REGISTERED PROFESSIONAL ENGINEER MARK S. BISSELL

DATE: 11-06-23	SCALE: 1" = 30'
DESIGNED:	CHECKED: KFW
DRAWN: AKM	APPROVED: BPG

SHEET: 8 OF 13
CAD FILE: 4651ASB-PH4
PROJECT NO: 4651

DocuSign Envelope ID: 6E3D8B20-E45B-4FE9-AFBA-E0D9D0922DF7

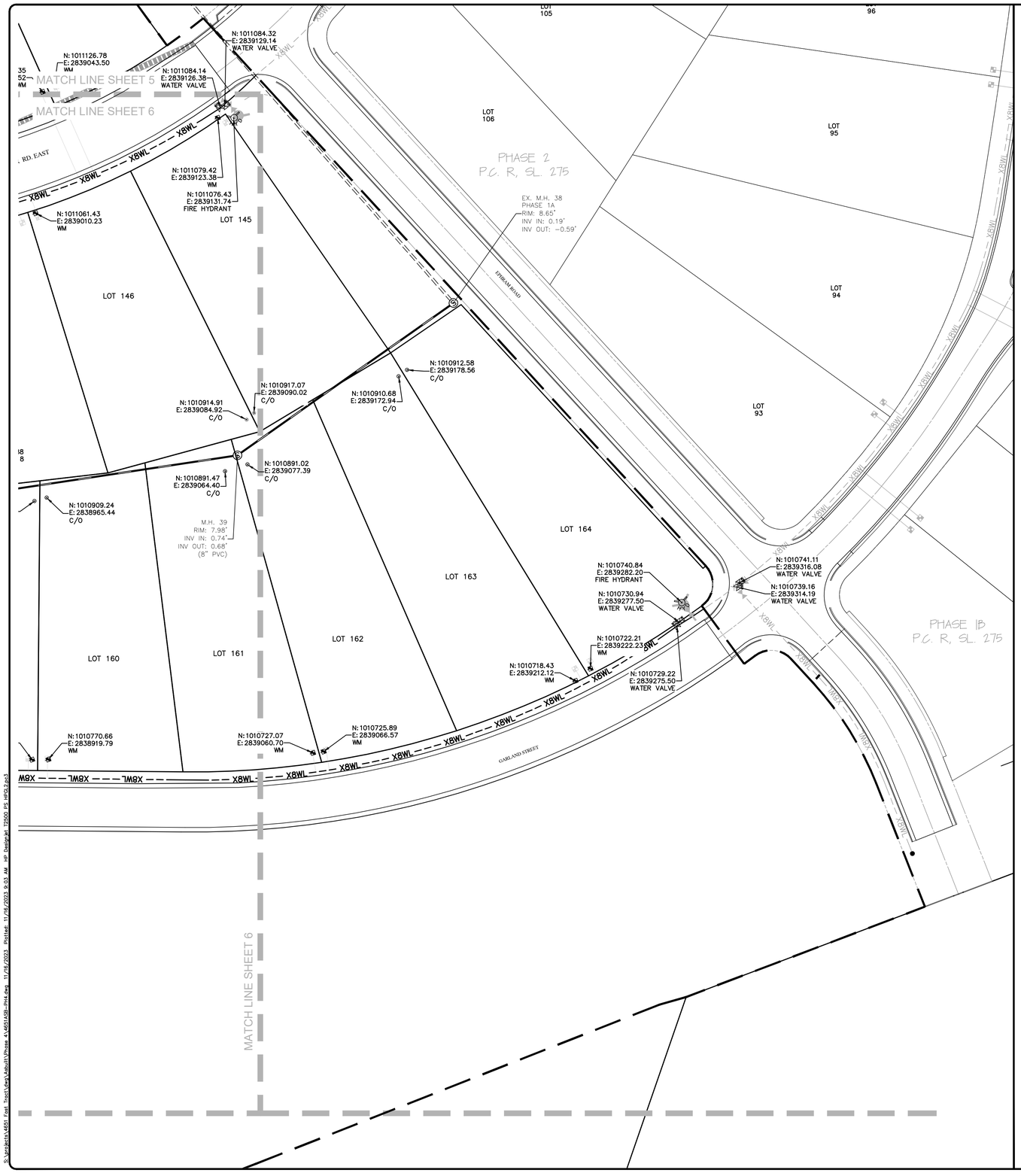

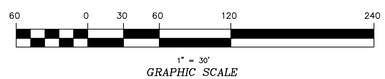

Bissell Professional Group
Firm License # C-0793
3512 North Croatan Highway
P.O. Box 1888
Kitty Hawk, North Carolina 27949
(252) 261-3300
FAX (252) 261-1760
BISSELL PROFESSIONAL GROUP
Engineers, Planners, Surveyors and Environmental Specialists

WASTE WATER & SANITARY SEWER PLAN

THIS DOCUMENT IS THE SOLE PROPERTY OF BPG, INC. OF KITTY HAWK, NORTH CAROLINA. THE REPRODUCTION, IN WHOLE OR PART, OR THE MODIFICATION OF ANY DETAIL OR DESIGN IS NOT TO BE MADE WITHOUT THE EXPRESS WRITTEN CONSENT OF MARK S. BISSELL, PRINCIPAL OF BPG, INC., COPYRIGHT 2005.

PROJECT:

THE FOST TRACT PD-R - PHASE 4

MOYOCK TOWNSHIP CURRITUCK COUNTY NORTH CAROLINA

RECORD DRAWINGS - PHASE 4

REVISIONS

NO.	DATE	DESCRIPTION	BY

DocuSigned by:
C6DA34EC9C8F428...
L-1786 SEAL NORTH CAROLINA PROFESSIONAL SURVEYOR MARK S. BISSELL

DATE: 11-06-23	SCALE: 1" = 30'
DESIGNED:	CHECKED: KFW
DRAWN: AKM	APPROVED: BPG

SHEET: 9 OF 13

CAD FILE: 4651ASB-PH4

PROJECT NO: 4651

S:\projects\4651 Fost Tract\dwg\Asbuilt\Phase 4\4651ASB-PH4.dwg 11/16/2023 Plotted: 11/16/2023 9:03 AM HP Designjet T2500 PS HPGL2.pc3

DocuSign Envelope ID: 6E3D8B20-E45B-4FE9-AFBA-E0D9D0922DF7

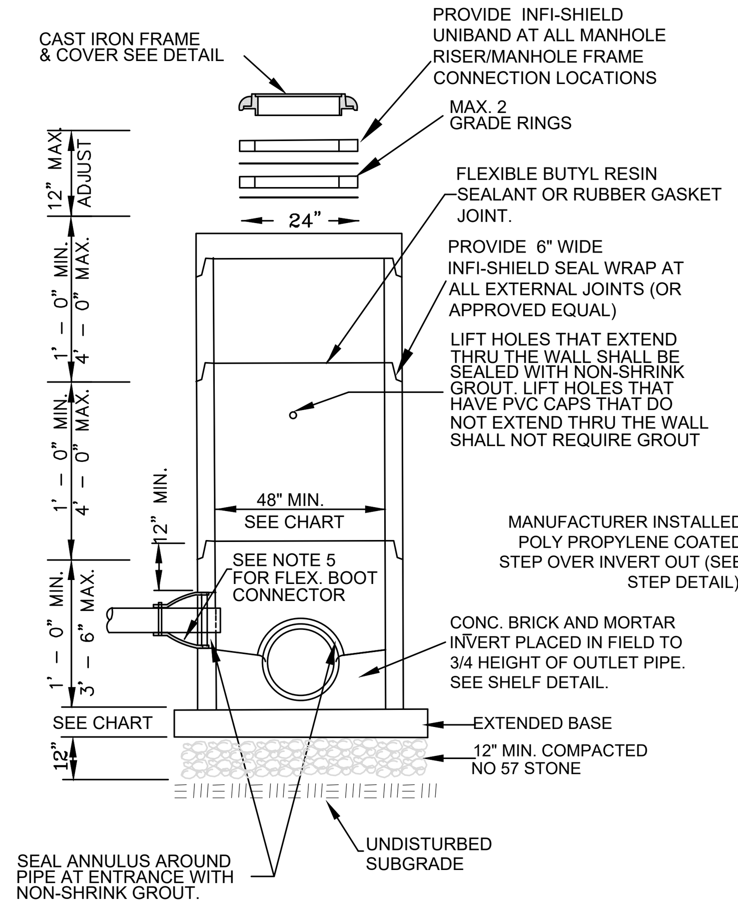

STANDARD PRECAST CONCRETE MANHOLE
NOT TO SCALE (ALL MH SHALL HAVE EX. BASES)

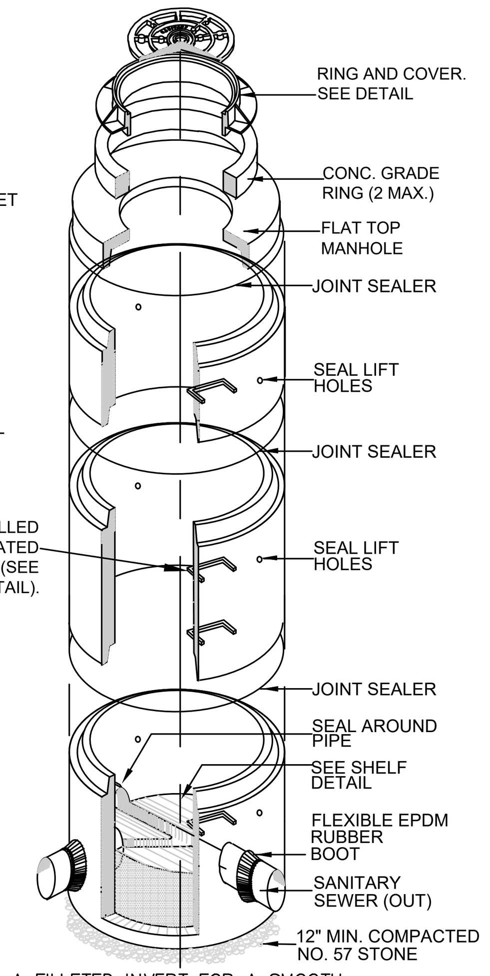

A FILLETED INVERT FOR A SMOOTH TRANSITION OF FLOW BETWEEN INLET & OUTLET PIPE SHALL BE PROVIDED.

NOTES:
1. PRECAST REINFORCED CONCRETE MANHOLES SHALL BE IN ACCORDANCE WITH ASTM C-478
2. MIN. CONCRETE COMPRESSIVE STRENGTH SHALL BE 4000 PSI.
3. ALL MANHOLES SHALL HAVE MIN. 6" EXTENDED BASE.
4. FLEXIBLE BUTYL RESIN JOINT SEALANT SHALL BE IN ACCORDANCE W/ ASTM C990. RUBBER GASKET JOINTS SHALL BE IN ACCORDANCE W/ASTM C-443.
5. FLEXIBLE EPDM RUBBER BOOT CONNECTORS SHALL BE IN ACCORDANCE W/ ASTM C923, INSTALLED BY MANUFACTURER W/STAIN- LESS STEEL COMPRESSION RING AND TAKE-UP CLAMP. CONNECTION TO MAIN SHALL BE BY CONTRACTOR WITH STAINLESS STEEL PIPE CLAMP.
6. MORTAR SHALL BE QUICK SETTING, NON-SHRINK GROUT MIXED IN ACCORDANCE WITH MANUFACTURER'S RECOMMENDATIONS.
7. MANHOLE STEPS SHALL BE IN ACCORDANCE WITH ASTM C478 AND OSHA REGULATIONS ALIGN W/INVERT OUT.
8. PREFORMED MANHOLE INVERTS ARE NOT ACCEPTABLE UNLESS SPECIFICALLY APPROVED BY THE PROJECT ENGINEER. STANDING WATER IN INVERT OF MANHOLE IS NOT ACCEPTABLE.
9. ALL MANHOLES SHALL BE TESTED IN ACCORDANCE WITH ASTM C1244 "STANDARD TEST METHOD FOR CONCRETE SEWER MANHOLES BY THE NEGATIVE AIR PRESSURE (VACUUM) TEST PRIOR TO BACKFILL.

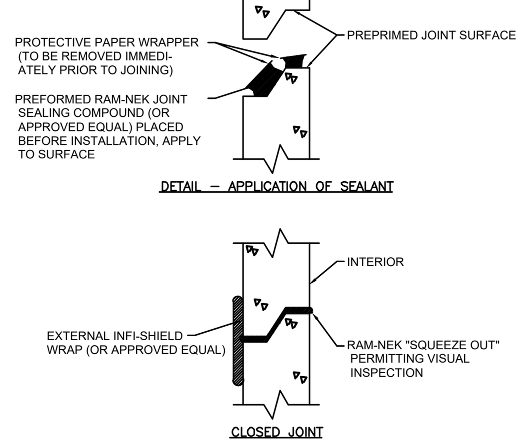

JOINT SEAL DETAIL
NOT TO SCALE

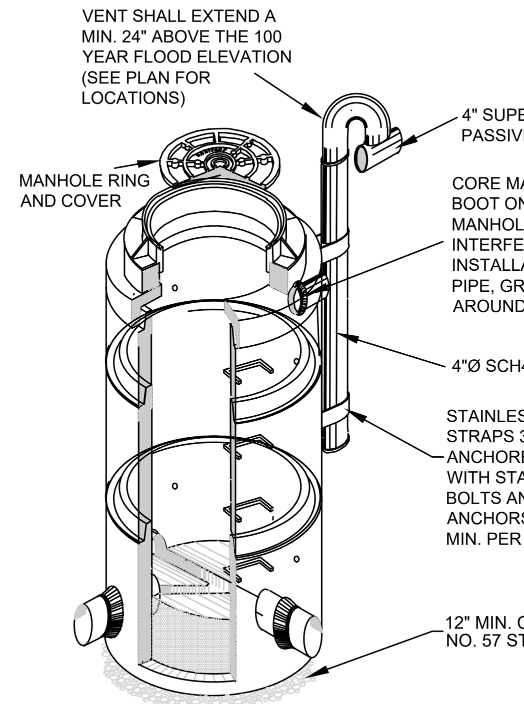

STANDARD PRECAST CONCRETE MANHOLE WITH VENT PIPING
NOT TO SCALE

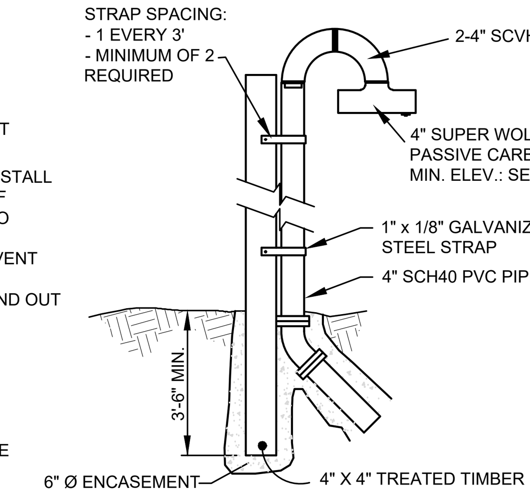

VENT PIPING DETAIL
NOT TO SCALE

NOTES:
1. VENT PIPE OPENING IN PRECAST CONCRETE MANHOLE WALL SHALL BE CAST OR CORED WITH A CONCRETE CORING MACHINE.
2. LOCATION OF VENT PIPE SHALL BE AS DIRECTED BY THE CONSTRUCTION INSPECTOR WITH WATERTIGHT RING AND COVER VENT TOP TO BE ELEVATED AT LEAST 12" ABOVE THE 100 YEAR FLOOD PLAIN ELEVATION.
3. PASSIVE CARBON VENT FILTERS SHALL ONLY BE INSTALLED ON LIFT STATIONS AND MANHOLES WITH VENT PIPING. (SEE VENTED MANHOLE SCHEDULE)

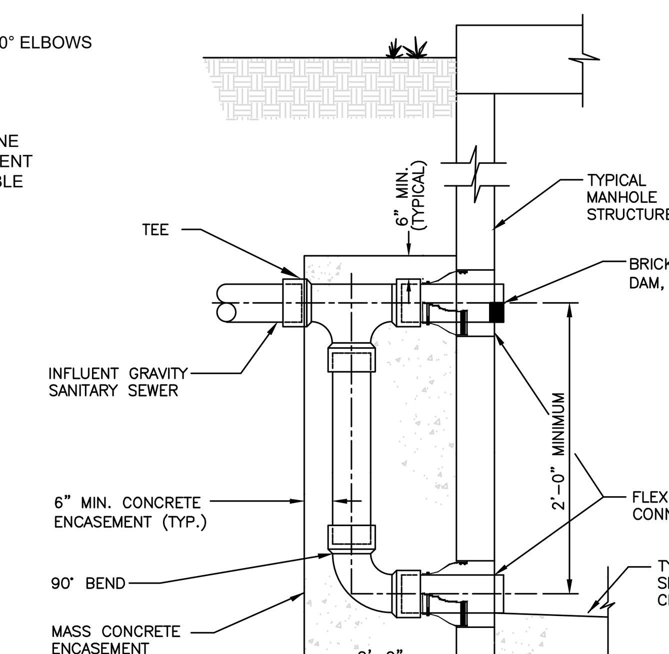

NOTES
1. MASS CONCRETE ENCASEMENT SHALL BE NO LESS THAN 2500 PSI CONCRETE.
2. DROP PIPE AND FITTINGS SHALL BE OF EQUAL SIZE AND MATERIALS AS THE INFLUENT SEWER.
3. AN OUTSIDE DROP CONNECTION SHALL BE REQUIRED FOR ALL INFLUENT CONNECTIONS WHICH HAVE A DIFFERENCE OF 2'–6" OR MORE BETWEEN INVERTS.
4. DROP MANHOLE SPECIFICATIONS SHALL BE IDENTICAL TO THE STANDARD MANHOLE SPECIFICATIONS.

TYPICAL OUTSIDE DROP MANHOLE DETAIL
NOT TO SCALE

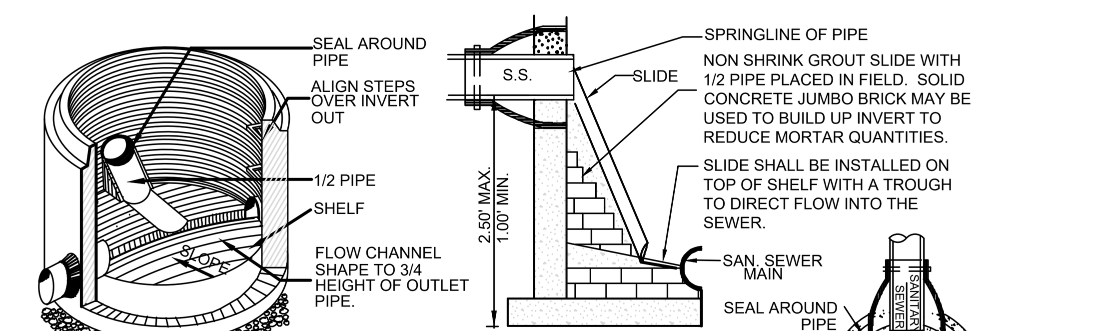

PIPE SLIDE DETAIL
NOT TO SCALE

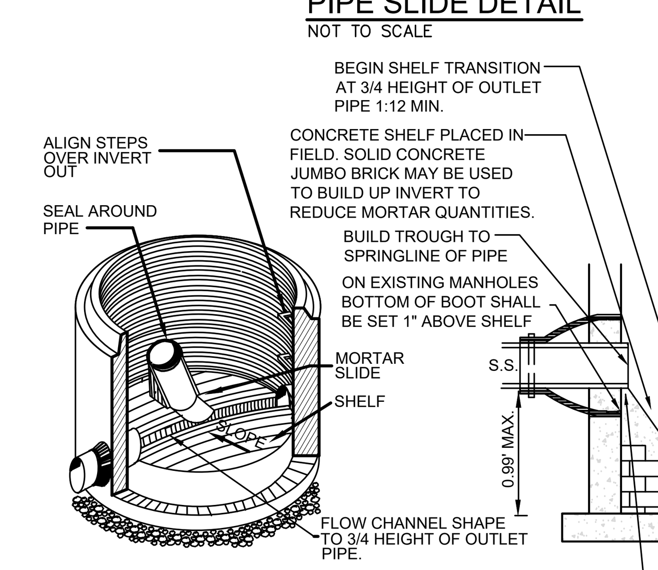

MORTAR SLIDE DETAIL
NOT TO SCALE

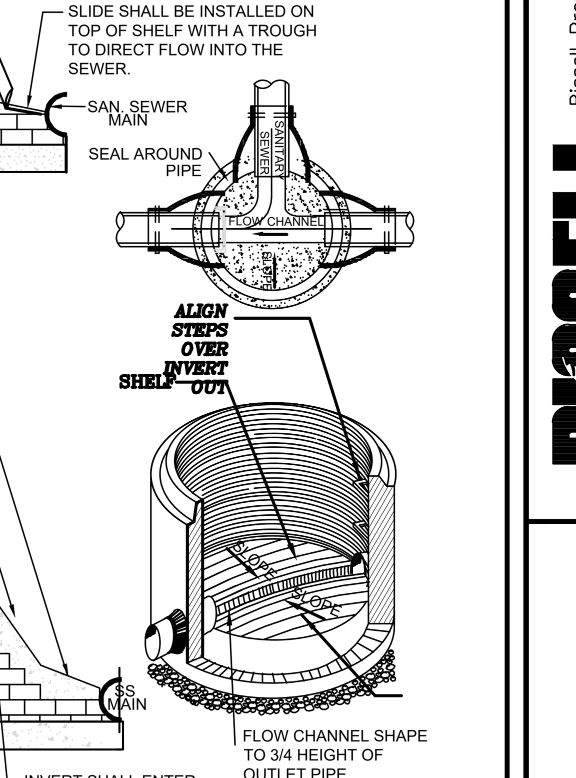

SHELF DETAIL
NOT TO SCALE

MORTAR AND PIPE SLIDE NOTES:
1. MORTAR SLIDE SHALL BE USED FOR LESS THAN 1 FOOT SEPARATION BETWEEN INVERT OUT & INVERT OF INCOMING PIPE.
2. PIPE SLIDE REQ'D WHERE VERTICAL SEPARATION BETWEEN PIPE INVERTS IS GREATER THAN 1 ' AND LESS THAN OR EQUAL TO 2.5'.
3. OUTSIDE DROP STRUCTURE REQUIRED WHERE VERTICAL SEPARATION BETWEEN INVERTS EXCEEDS 2.50'. SEE OUTSIDE DROP MANHOLE DETAIL.
4. VERIFY SLIDE INSTALLATION WITH PROJECT COORDINATOR PRIOR TO CONSTRUCTION.
5. MANHOLE AND CONNECTIONS SHALL BE IN ACCORDANCE WITH STANDARD MANHOLE DETAIL.
6. BRICK USED FOR INVERT AND SHELF CONSTRUCTION SHALL BE NCDOT STANDARD CONCRETE JUMBO BRICK. MEETING ASTM C55 GRADE S-II EXCEPT ABSORPTION LESS THAN 10 LBS/CU.FT.
7. MANHOLES GREATER THAN 12' IN DEPTH SHALL HAVE MIN. 6" EXTENDED BASE.
8. THE MINIMUM SLOPE ACROSS THE INVERT OF THE MANHOLE SHALL BE 2% UNLESS OTHERWISE APPROVED BY ENGINEER
9. SEE STANDARD MANHOLE DETAIL FOR ADDITIONAL REQUIREMENTS.
10. DROP AND / OR SLIDE REQUIREMENTS SHALL APPLY TO ALL LATERALS ENTERING MANHOLES AS OUTLINED IN NOTES 1,2&3. NO MORE THAN 4, FOUR INCH LATERALS OR 3, SIX INCH LATERALS SHALL ENTER A 4' DIAMETER TERMINAL MANHOLE. NO MORE THAN 2 LATERALS (REGARDLESS OF SIZE) SHALL ENTER ALL OTHER 4' DIAMETER MANHOLES. ALL LATERALS SHALL HAVE AN INDIVIDUAL TROUGH. 5' DIAMETER MANHOLES SHALL BE USED IF THE ABOVE CONDITIONS ARE NOT MET. THE INVERT OF THE LATERAL SHALL B A MINIMUM OF 1" ABOVE THE SHELF.

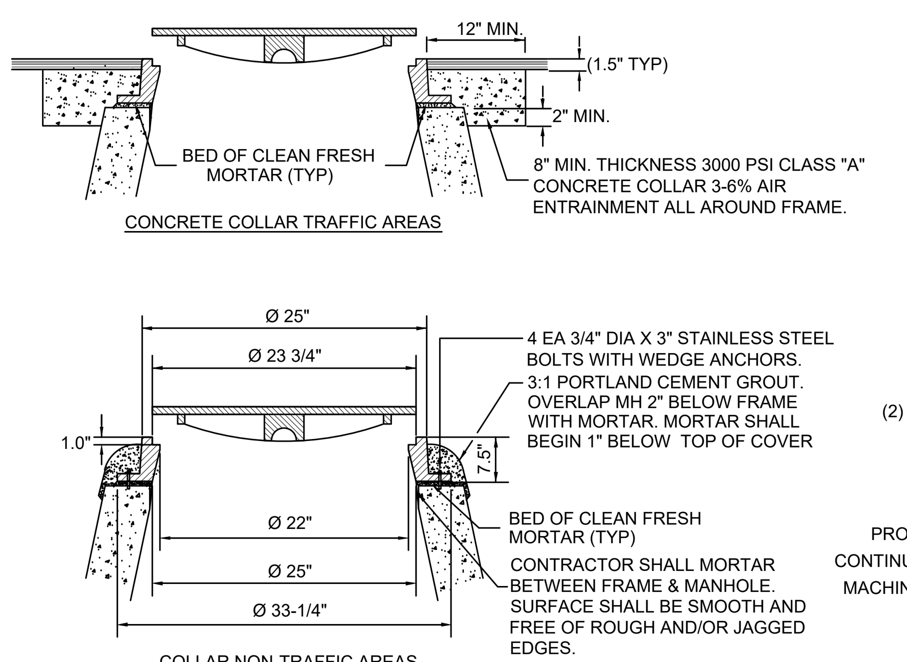

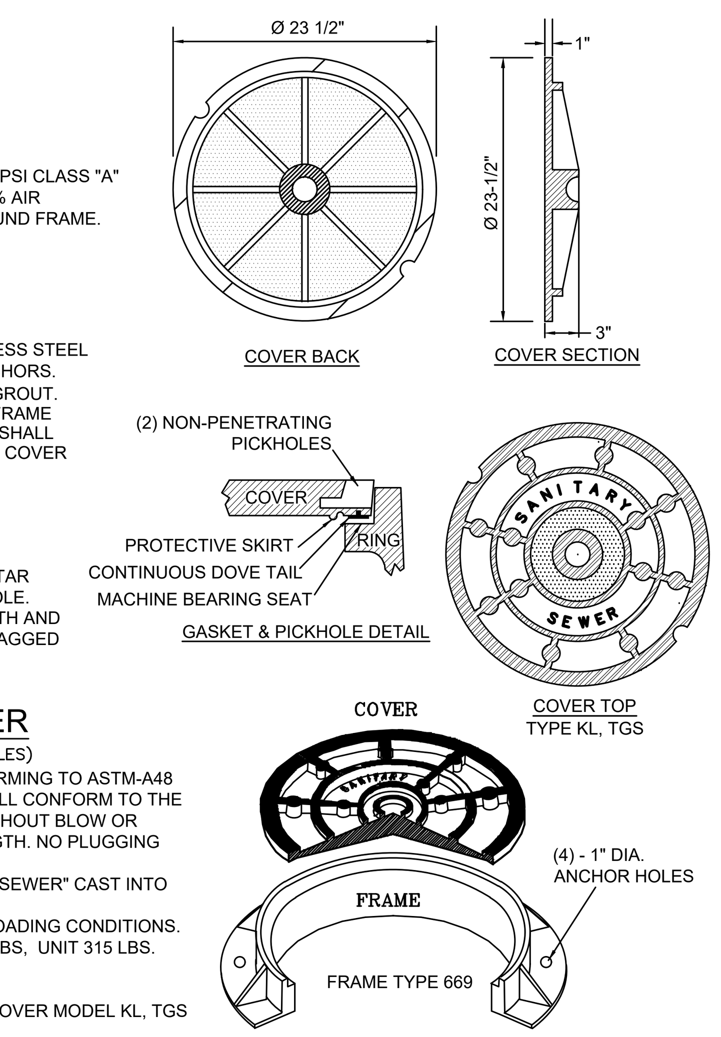

STANDARD MANHOLE RING AND COVER
NOT TO SCALE (TO BE USED ON ALL MANHOLES)

NOTES:
1. MANHOLE FRAME AND COVER SHALL BE MADE OF GRAY CAST IRON CONFORMING TO ASTM-A48 CLASS 35B, MANUFACTURED BY SAME MANUFACTURER. ALL CASTINGS SHALL CONFORM TO THE SHAPE AND DIMENSIONS SHOWN. THEY SHALL BE CLEAN AND PERFECT, WITHOUT BLOW OR SAND HOLES OR DEFECTS OF ANY KIND, TENDING TO IMPAIR THEIR STRENGTH. NO PLUGGING OR STOPPING OF DEFECTIVE HOLES WILL BE PERMITTED.
2. CASTINGS SHALL BE UNPAINTED AND SHALL HAVE THE LETTERS "SANITARY SEWER" CAST INTO COVER. LETTERS SHALL BE RAISED AND CLEARLY VISIBLE.
3. MANHOLE RING AND COVER SHALL WITHSTAND H-20 VEHICULAR TRAFFIC LOADING CONDITIONS.
4. MINIMUM AVERAGE WEIGHT: PLUS OR MINUS 5% RING 190 LBS., COVER 125 LBS, UNIT 315 LBS.
5. COVERS SHALL HAVE (2) NON-PENETRATING PICKHOLES.
6. A T-GASKET SHALL BE PROVIDED BETWEEN COVER AND RING SEAT.
7. RING AND COVER SHALL BE US FOUNDRY & MFG. CORP RING MODEL 669 & COVER MODEL KL, TGS (ALTERNATES SHALL BE APPROVED BEFORE INSTALLATION)

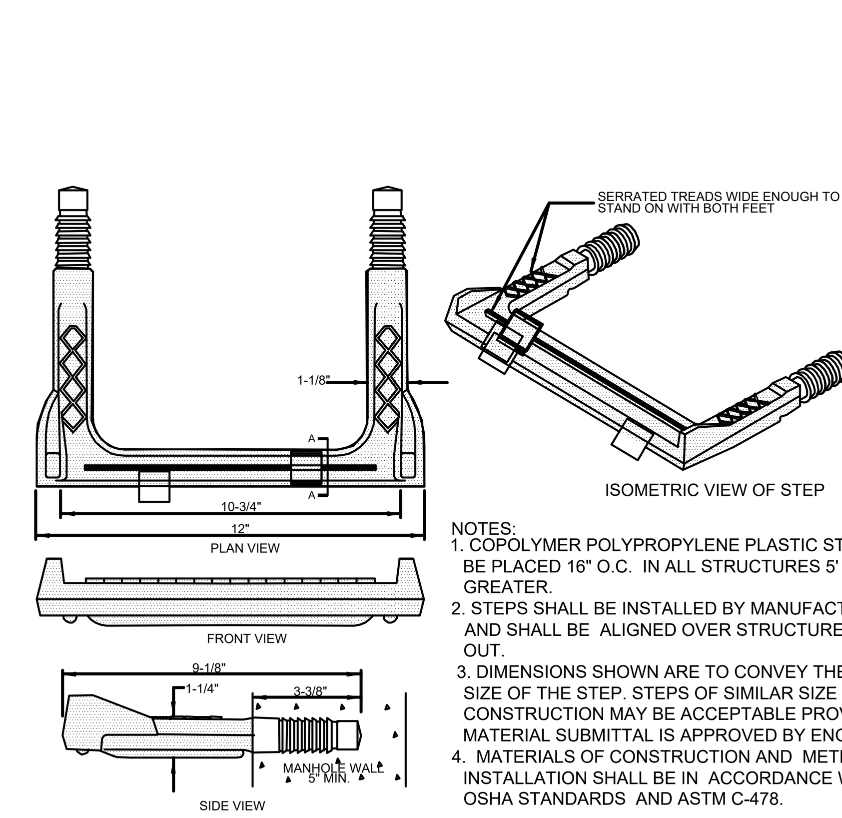

NOTES:
1. COPOLYMER POLYPROPYLENE PLASTIC STEP SHALL BE PLACED 16" O.C. IN ALL STRUCTURES 5' DEPTH OR GREATER.
2. STEPS SHALL BE INSTALLED BY MANUFACTURER AND SHALL BE ALIGNED OVER STRUCTURE INVERT OUT.
3. DIMENSIONS SHOWN ARE TO CONVEY THE DESIRED SIZE OF THE STEP. STEPS OF SIMILAR SIZE AND CONSTRUCTION MAY BE ACCEPTABLE PROVIDED MATERIAL SUBMITTAL IS APPROVED BY ENGINEER.
4. MATERIALS OF CONSTRUCTION AND METHOD OF INSTALLATION SHALL BE IN ACCORDANCE WITH OSHA STANDARDS AND ASTM C-478.

MANHOLE STEP DETAIL
NOT TO SCALE

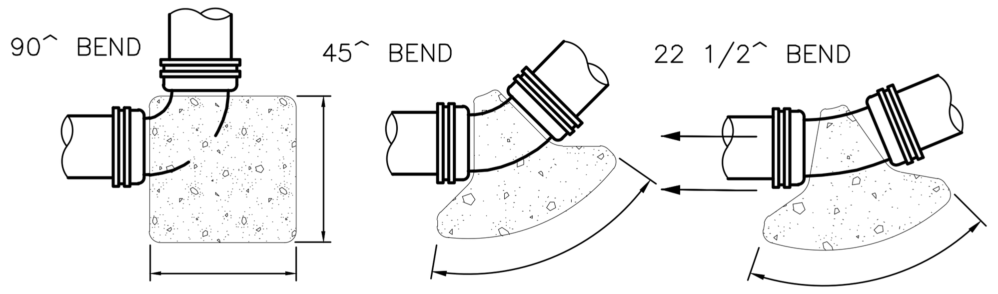

90^ BEND

PIPE	AREA AGAINST UNDISTURBED SOIL
2"	1'–0" x 1'–0"
4"	1'–0" x 1'–0"
6"	1'–3" x 1'–3"
8"	2'–0" x 2'–0"
10"	2'–6" x 2'–6"
12"	3'–0" x 3'–0"

45^ BEND

PIPE	AREA AGAINST UNDISTURBED SOIL
2"	1'–0" x 1'–0"
4"	1'–0" x 1'–0"
6"	1'–3" x 1'–3"
8"	1'–6" x 1'–6"
10"	2'–0" x 2'–0"
12"	2'–3" x 2'–3"

22 1/2^ BEND

PIPE	AREA AGAINST UNDISTURBED SOIL
2"	1'–0" x 1'–0"
4"	1'–0" x 1'–0"
6"	1'–0" x 1'–0"
8"	1'–2" x 1'–2"
10"	1'–6" x 1'–6"
12"	1'–8" x 1'–8"

NOTE:
PIPING LESS THAN 2" IN DIAMETER SHALL HAVE THE SAME REQUIREMENTS AS 2" DIAMETER PIPE

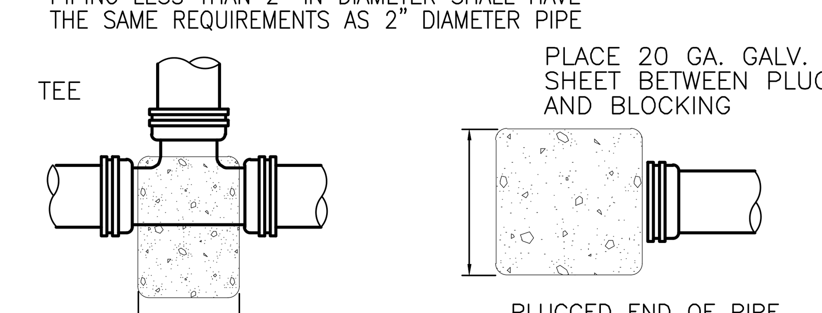

TEE

PIPE	AREA AGAINST UNDISTURBED SOIL
2"	1'–0" x 1'–0"
4"	1'–2" x 1'–2"
6"	1'–6" x 1'–6"
8"	1'–9" x 1'–9"
10"	2'–2" x 2'–2"
12"	2'–8" x 2'–8"

PLUGGED END OF PIPE OR FITTING

PIPE	AREA AGAINST UNDISTURBED SOIL
2"	1'–0" x 1'–0"
4"	1'–2" x 1'–2"
6"	1'–6" x 1'–6"
8"	1'–9" x 1'–9"
10"	2'–2" x 2'–2"
12"	2'–8" x 2'–8"

CONCRETE THRUST BLOCKING DETAILS
NOT TO SCALE

NOTE:
CONCRETE THRUST BLOCKING SHALL ONLY BE USED WHERE MECHANICAL RESTRAINTS ARE NOT FEASIBLE. PRIOR APPROVAL MUST BE OBTAINED FROM ENGINEER PRIOR TO USING THRUST BLOCKING

NOTES:
1. SEE STANDARD MANHOLE AND PIPE SLIDE, MORTAR SLIDE AND SHELF DETAILS FOR ADDITIONAL INFORMATION.
2. THE "E" DISTANCES INDICATED ARE FOR CONNECTION TO AN EXISTING OUTFALL AND ARE THE MINIMUM DISTANCE ALLOWABLE.

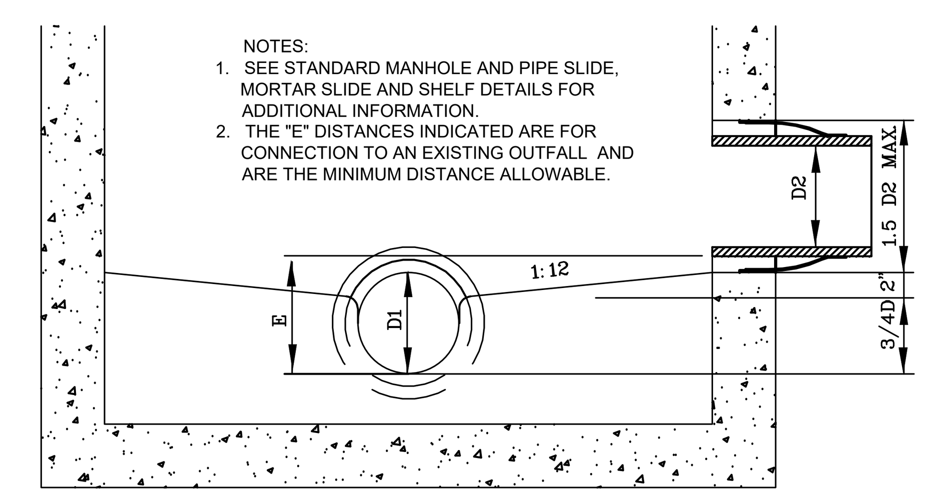

TO FIND "E" ENTER CHART AT LEFT WITH EFFLUENT PIPE SIZE AND ENTER PIPE AT TOP WITH INFLUENT PIPE SIZE. "E" DISTANCE IS POINT OF CONVERGENCE OF COLUMN AND ROW.

D1 \ D2	4"	6"	8"	12"	15"		18"	24"
8	9.00	9.50	10.00	–	–	–	–	
12	11.00	11.50	12.00	13.00	–	–	–	
15	14.25	14.75	15.25	16.25	17.00	–	–	
18	16.50	17.00	17.50	18.50	19.25	20.00	–	
24	21.00	21.50	22.00	23.00	23.75	24.50"	26.00	

WHERE 5' MH IS REQUIRED ADD 1/2" TO "E" DISTANCE TO ACCOUNT FOR THE ADDITIONAL 6" OF SHELF SLOPE.

MANHOLE CONNECTION GUIDE
NOT TO SCALE

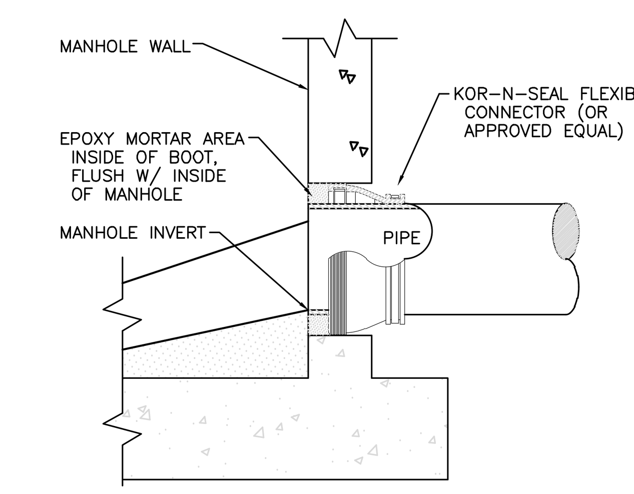

FLEXIBLE MANHOLE CONNECTION DETAIL
NOT TO SCALE

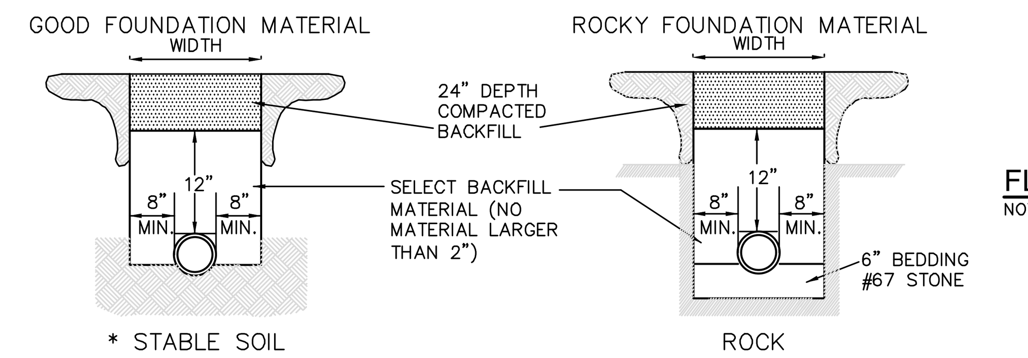

* SCRAPE THE BOTTOM OF THE TRENCH. REMOVE ALL STONES TO INSURE THE PIPE DOESN'T REST ON ROCK AND THEN COMPACT THE SOIL OR PROVIDE A 4" BEDDING OF #67 STONE.

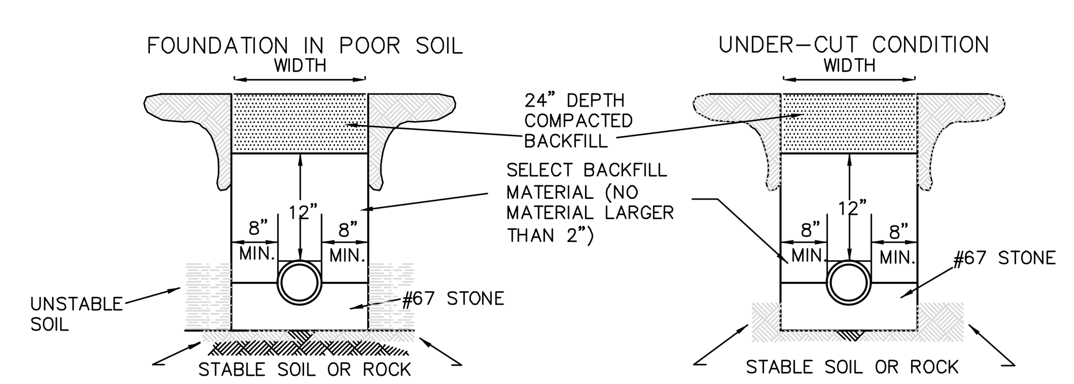

NOTE :
1. NO ROCKS SHALL BE ALLOWED WITHIN 24" OF THE WATER LINES.
2. NO ROCKS LARGER THAN 6" IN ANY DIMENSION SHALL BE ALLOWED ABOVE THE INITIAL BACKFILL.
3. THE INITIAL BACKFILL SHALL BE PLACED AND COMPACTED IN 6" LIFTS.
4. NO ORGANIC OR FROZEN MATERIAL OR DEBRIS SHALL BE ALLOWED IN THE TRENCH.
5. BELL HOLES SHALL BE DUG OUT IN ALL CASES.

TYPICAL SEWER PIPE INSTALLATION & BEDDING
NOT TO SCALE

TRENCH EXCAVATION LIMITS		
INTERNAL DIAMETER OF PIPE	W WIDTH OF TRENCH MAX.	MIN.
4"–6"	NO LIMIT	2'–0"
8"–10"	NO LIMIT	2'–2"
12"	3'–9"	O.D.+2'
14"–16"	4'–2"	O.D.+2'
18"	4'–4"	O.D.+2'
20"	4'–8"	O.D.+2'
24"	4'–11"	O.D.+2'
30"	5'–6"	O.D.+2'
36"	6'–0"	O.D.+2'

W=TRENCH WIDTH AT TOP OF PIPE
S=PAVEMENT REPLACEMENT WIDTH (S = W + 3'–0")

MAIN OR LATERAL MIN SLOPE
4" @2.00% MIN.
6" @ 0.67% MIN./MAIN
6" @ 2.00% MIN./LATERAL
8" @ 0.40% MIN.
12" @ 0.22% MIN.
15" @ 0.15% MIN.
18" @ 0.12% MIN.

GRAVITY SANITARY SEWER PIPE SCHEDULE

PIPE MATERIAL	PIPE SIZE INCHES	BEDDING TYPE FOR DEPTH OF COVER SHOWN TYPE "B"	TYPE "C"
PVC	8"	0 – 24"	N/A
PVC	15"	0 – 24"	N/A
DIP	8"	N/A	ALL DEPTHS
DIP	16"	N/A	ALL DEPTHS

NOTES:
(1) ALL SEWER SERVICE PIPE SHALL HAVE TYPE "A" BEDDING
(2) CHANGES IN PIPE BEDDING CLASSIFICATION SHALL ONLY BE MADE AT MANHOLES.
(3) DUCTILE IRON FORCE MAIN SHALL HAVE TYPE "A" BEDDING.

1. EMBEDMENT MATERIALS, CLASSES I, II, OR III AS DESCRIBED IN ASTM D 2321, SHALL BE USED FOR BEDDING FOR BEDDING, HAUNCHING AND INITIAL BACKFILL AND CAREFULLY COMPACTED FOR ALL FLEXIBLE PIPE.
2. BEDDING CLASSES A, B, C OR CRUSHED STONE AS DESCRIBED IN ASTM C 12 SHALL BE USED AND CAREFULLY COMPACTED FOR ALL RIGID PIPE.
3. ALL EXCAVATIONS SHALL COMPLY WITH THE TERMS AND CONDITIONS OF THE CONSTRUCTION STANDARDS FOR EXCAVATIONS IN OSHA "SAFETY AND HEALTH REGULATIONS FOR CONSTRUCTION", CHAPTER XV11 OF TITLE 29, CFR, PART 1926. THE CONTRACTOR SHALL HAVE A COMPETENT PERSON ON THE JOB AT ALL TIMES AND SHALL EMPLOY A PROFESSIONAL ENGINEER TO ACT UPON ALL PERTINENT MATTERS OF THE WORK.

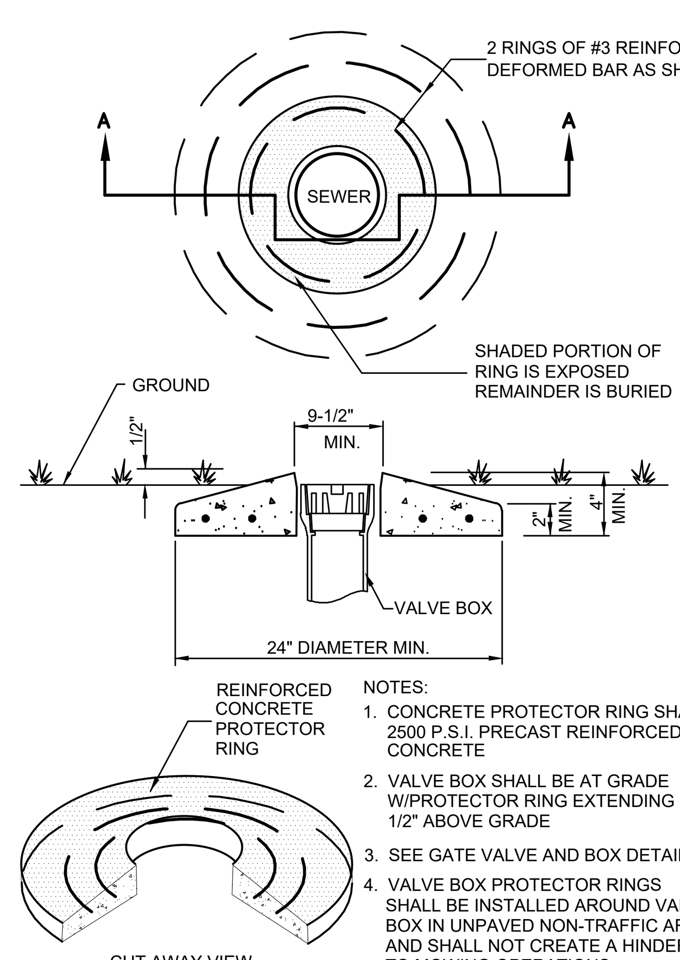

NOTES:
1. CONCRETE PROTECTOR RING SHALL BE 2500 P.S.I. PRECAST REINFORCED CONCRETE
2. VALVE BOX SHALL BE AT GRADE W/PROTECTOR RING EXTENDING 1/2" ABOVE GRADE
3. SEE GATE VALVE AND BOX DETAIL
4. VALVE BOX PROTECTOR RINGS SHALL BE INSTALLED AROUND VALVE BOX IN UNPAVED NON-TRAFFIC AREAS. AND SHALL NOT CREATE A HINDERANCE TO MOWING OPERATIONS.

VALVE BOX PROTECTOR RING DETAIL
SCALE: NONE

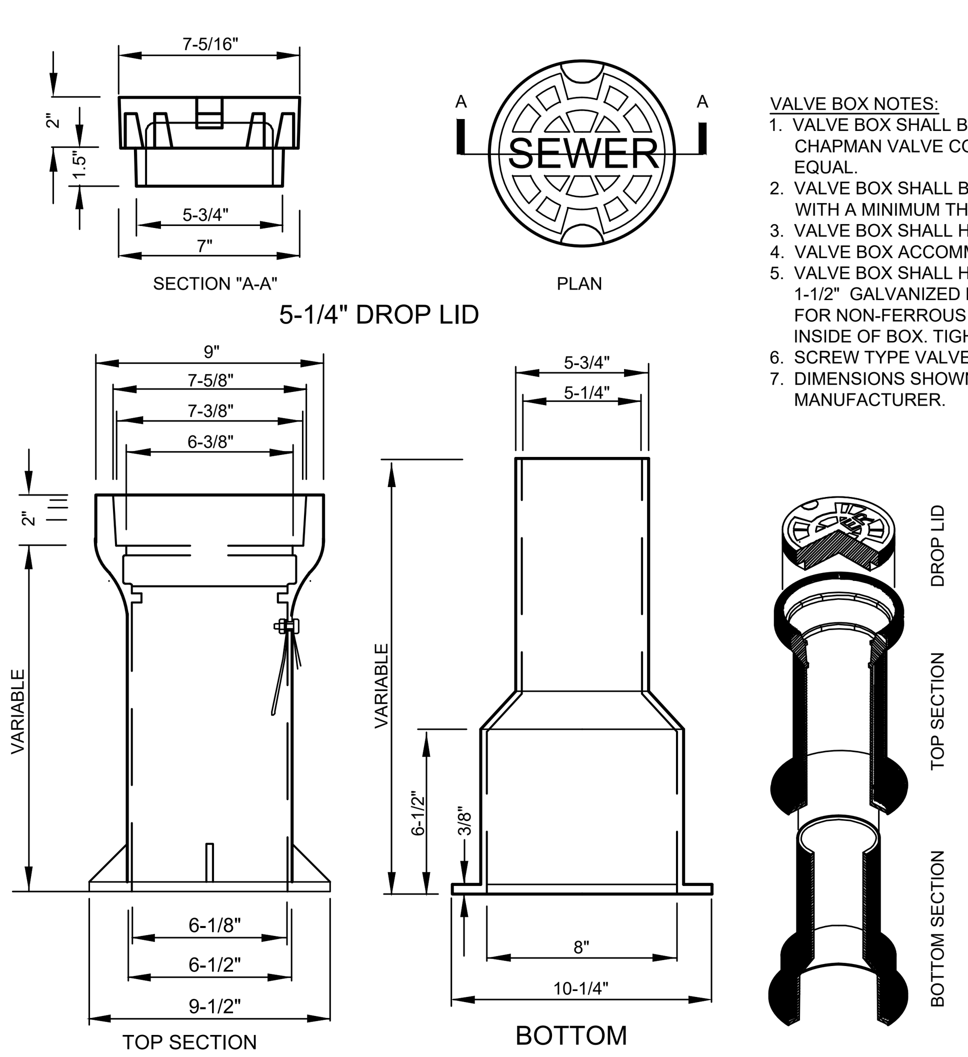

VALVE BOX NOTES:
1. VALVE BOX SHALL BE 3 PART SLIP-TYPE MANUFACTURED BY ALABAMA PIPE CO., CHAPMAN VALVE CO., COLOMBIAN IRON WORKS, R.D. WOOD CO. OR APPROVED EQUAL.
2. VALVE BOX SHALL BE 3-PIECE CLOSE GRAINED CAST IRON SLIP-TYPE VALVE BOX WITH A MINIMUM THICKNESS OF 3/16".
3. VALVE BOX SHALL HAVE RAISED LETTERS "SEWER" CAST INTO COVER.
4. VALVE BOX ACCOMMODATES 4" THRU 12" VALVES.
5. VALVE BOX SHALL HAVE 3/8" HOLE DRILLED IN TOP SECTION THRU WHICH A 1/4" X 1-1/2" GALVANIZED BOLT SHALL BE USED TO SECURE A 12GA. THHN TRACER WIRE FOR NON-FERROUS PIPE. A 1/2" WASHER SHALL BE USED BETWEEN NUT AND INSIDE OF BOX. TIGHTEN HAND TIGHT.
6. SCREW TYPE VALVE BOXES ARE NOT ACCEPTABLE.
7. DIMENSIONS SHOWN ARE FOR INFORMATION ONLY AND VARY BASED UPON THE MANUFACTURER.

VALVE BOX DETAIL
SCALE: NONE

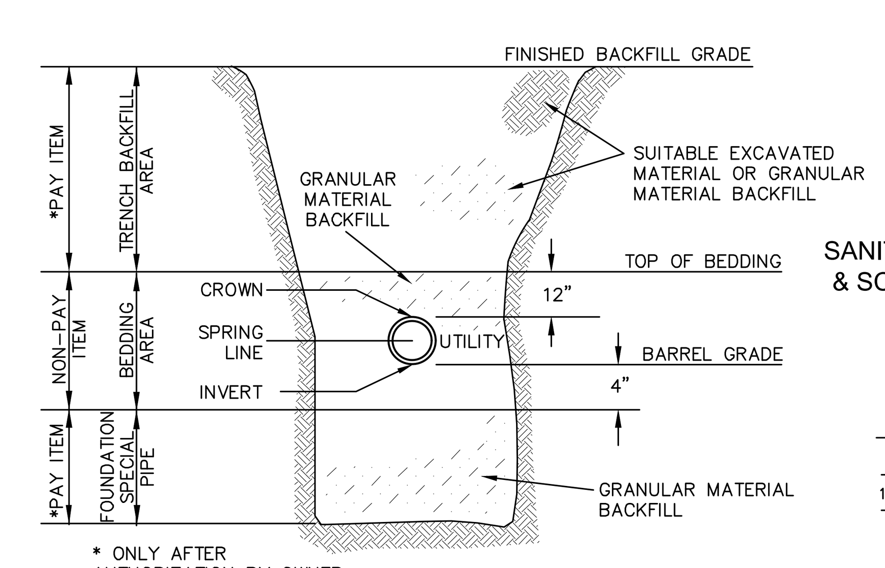

* ONLY AFTER AUTHORIZATION BY OWNER

FORCE MAIN & GRAVITY SEWER SERVICE TRENCH DETAIL
NOT TO SCALE

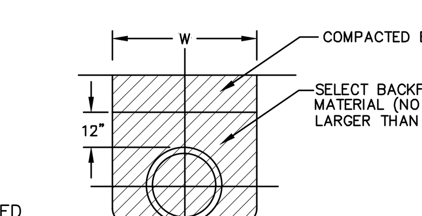

TYPE "A"
SANITARY SEWER LATERAL & SCH 80 PVC FORCEMAIN

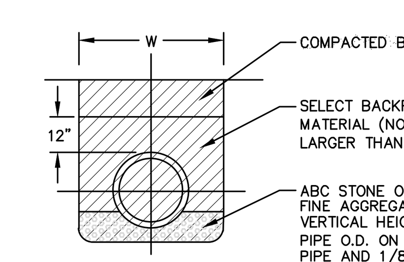

TYPE "C"
D.I.P. FORCEMAIN

Bissell Professional Group
Firm License # C-956
3512 North Croatan Highway
P.O. Box 1068
Kitty Hawk, North Carolina 27949
(252) 261-3266
FAX (252) 261-1760
BISSELL PROFESSIONAL GROUP
Engineers, Planners, Surveyors and Environmental Specialists

DETAILS

THIS DOCUMENT IS THE SOLE PROPERTY OF BPG, INC. OF KITTY HAWK, NORTH CAROLINA. THE REPRODUCTION, IN WHOLE OR PART, OR THE MODIFICATION OF ANY DETAIL OR DESIGN IS NOT TO BE MADE WITHOUT THE EXPRESS WRITTEN CONSENT OF MARK S. BISSELL, PRINCIPAL OF BPG, INC., COPYRIGHT 2005.

PROJECT:
THE FOST TRACT PD-R - PHASE 4
MOYOCK TOWNSHIP CURRITUCK COUNTY NORTH CAROLINA
RECORD DRAWINGS - PHASE 4

REVISIONS

NO.	DATE	DESCRIPTION	BY

DocuSigned by: C6DA34EC9CBF428...
SEAL L-1796 NORTH CAROLINA PROFESSIONAL LAND SURVEYOR MICHAEL D. BARR

DATE: 11-06-23	SCALE: 1" = 30'
DESIGNED:	CHECKED: KFW
DRAWN: AKM	APPROVED: BPG

SHEET: 10 OF 13
CAD FILE: 4651ASB-PH4
PROJECT NO: 4651

S:\projects\4651 Fost Tract\dwg\Asbuilt\Phase 4\4651ASB-PH4.dwg 11/16/2023 Plotted: 11/16/2023 9:03 AM HP DesignJet T2500 PS HPGL2.pc3

DocuSign Envelope ID: 6E3D8B20-E45B-4FE9-AFBA-E0D9D0922DF7

ORDER OF PRECENDENCE GENERAL NOTES/TECHNICAL SPECIFICATIONS

1. THE NOTES CONTAINED HEREIN ARE INTENDED TO SUPPLEMENT THE TECHNICAL SPECIFICATIONS AND PROVIDE EASY REFERENCE FOR THE CONTRACTOR. IN NO CASE SHALL THESE NOTES VOID ANY PART, SECTION OR REQUIREMENT OUTLINED IN THE TECHNICAL SPECIFICATIONS CONTAINED IN THE CONTRACT DOCUMENTS. IF CONFLICTS OCCUR BETWEEN THE TECHNICAL SPECIFICATIONS AND THE NOTES CONTAINED HEREIN, THE TECHNICAL SPECIFICATIONS SHALL SUPERSEDE.

2. CONTRACTOR IS CHARGED WITH PERFORMING SITE INVESTIGATIONS TO ASCERTAIN EXISTING SITE CONDITIONS. PHOTOGRAPHIC DOCUMENTATION OF PRE-EXISTING CONSTRUCTION CONDITIONS WILL BE CONDUCTED BY THE ENGINEER FOR DETERMINATION OF COMPLIANCE WITH CONDITIONS NOTED HEREON.

GENERAL NOTES

1. ACCESS TO SITES SHALL BE BY PUBLIC RIGHT-OF-WAYS AND UTILITY EASEMENTS. OTHER ACCESS LOCATIONS REQUIRED SHALL BE SECURED BY THE CONTRACTOR AT NO ADDITIONAL EXPENSE TO THE OWNER. SUPPLEMENTAL EROSION CONTROL MEASURES SHALL BE REQUIRED TO INCLUDE CONSTRUCTION ENTRANCES, SILT FENCING, RESTORATION, ETC. ADDITIONAL MEASURES SHALL BE INCLUDED AS PART OF A SUPPLEMENTAL EROSION CONTROL PLAN PREPARED BY THE CONTRACTOR.

2. THE CONTRACTOR SHALL BE REQUIRED TO PROVIDE THE CONSTRUCTION STAGING AREA AT HIS EXPENSE.

3. THE CONTRACTOR IS EXPECTED AND REQUIRED TO COOPERATE WITH THE PROPERTY OWNERS AFFECTED BY THE WORK. MAIL ADJOINING PROPERTY OWNER LETTERS TO EFFECTED PROPERTY OWNERS NOTIFYING THEM THAT WORK WILL BE OCCURRING WITHIN THE AREAS ADJOINING THEIR PROPERTIES. THIS LETTER SHALL GIVE PROPERTY OWNERS A MINIMUM OF 14 DAYS WRITTEN NOTICE PRIOR TO COMMENCEMENT OF CONSTRUCTION FOR REMOVAL OF ANY PERSONAL ITEMS FROM THE RIGHT- OF-WAY. THE LETTER OUTLINES THE EXTENT OF THE WORK TO BE PERFORMED TO INCLUDE DRIVEWAY DISRUPTIONS.

4. CONTRACTOR SHALL MAINTAIN A NEAT AND CLEAN JOB-SITE TO INCLUDE STAGING/STORAGE AREAS AS FOLLOWS:
   - PERFORM DUST CONTROL BY WATERING DAILY OR AS DIRECTED BY THE ENGINEER AND/OR CURRITUCK COUNTY.
   - SWEEP STREETS A MINIMUM OF ONCE WEEKLY (FRIDAY) OR AS DIRECTED BY THE ENGINEER AND/OR CURRITUCK COUNTY.
   - BLADE, LEVEL AND RE-COMPACT ALL EXPOSED TRENCHES WEEKLY (OR AS DIRECTED BY THE ENGINEER) TO PRODUCE A SMOOTH "RIDE".
   - PERFORM DAILY CLEAN-UP OF ALL DIRT, DEBRIS AND SCRAP MATERIALS.
   - REMOVE EXCESS EQUIPMENT, MATERIALS, TOOLS, ETC. NOT NEEDED.
   - ANY DRIVEWAY REMOVALS MUST HAVE A TEMPORARY SURFACE INSTALLED WITHIN THE SAME DAY AS REMOVAL. APPROVED SURFACES MAY CONSIST OF EITHER ABC OR MILLINGS.

   THE WORK WITHIN RIGHT OF WAY AREAS MUST BE KEPT IN AN ORDERLY AND NEAT FASHION. NO MATERIAL (SOILS, GRAVEL OR OTHER PROJECT FILL) CAN BE PLACED DIRECTLY ON ANY STREET SURFACE WITHOUT MATTING BEING PUT DOWN FIRST. ANY DAMAGE TO ANY ROAD SURFACE FROM CONSTRUCTION ACTIVITIES MUST BE REPAIRED AT OWNERS EXPENSE.

5. EXCESS SUITABLE SOIL EXCAVATED DURING CONSTRUCTION SHALL BE STOCKPILED FOR USE ON THE PROJECT OR DISPOSED OF OFF-SITE AS DIRECTED BY THE ENGINEER. THE CONTRACTOR SHALL NOT BE ALLOWED TO STOCKPILE MATERIALS OR EXCESS MATERIALS IN THE STREET RIGHT-OF-WAYS AT ANY TIME. THE CONTRACTOR SHALL PROVIDE A SUFFICIENT AND SUITABLE STOCKPILE AREA AND LOCATION AT THE CONTRACTOR'S EXPENSE.
6. CONTRACTOR SHALL PROVIDE MEASURES DURING CONSTRUCTION TO SECURE THE SITE AND EXCAVATION FROM THE GENERAL PUBLIC AND COMPLY WITH ALL OSHA REGULATIONS. JOB SITE SAFETY IS THE EXCLUSIVE AND SOLE RESPONSIBILITY OF THE CONTRACTOR. OPEN EXCAVATION LEFT UNATTENDED OR OVER NIGHT IS NOT ACCEPTABLE AND SHALL BE FILLED IMMEDIATELY.
7. CONTRACTOR SHALL REPAIR OR REPLACE DRIVES DISTURBED BY CONSTRUCTION TO EXISTING OR BETTER CONDITIONS. NO SEPARATE PAYMENT UNLESS OTHERWISE INDICATED.
8. CONTRACTOR SHALL PROVIDE TEMPORARY FENCING WHERE FENCES ARE REMOVED FOR CONSTRUCTION. CONTRACTOR SHALL COORDINATE FENCE REMOVAL OR REINSTALLATION WITH INDIVIDUAL PROPERTY OWNERS PRIOR TO REMOVAL. CONTRACTOR SHALL REINSTALL ALL SHEDS, FENCES, ETC. TO AS GOOD OR BETTER THAN EXISTING CONDITIONS UNLESS OTHERWISE INDICATED. (NO SEPARATE PAYMENT).
9. CONTRACTOR SHALL REPLACE ALL DISTURBED MAILBOXES, SIGNS, ETC. DISTURBED DURING CONSTRUCTION WITHIN 24 HOURS OF DISTURBANCE. PERMANENT ROAD SIGNAGE DISTURBED SHALL BE REPLACED IMMEDIATELY AND IF NECESSARY ROADWAY SIGNS SHALL BE TEMPORARILY INSTALLED IN A LOCATION CONSISTENT WITH THE NCMUTCD TO PROVIDE CONTINUOUS TRAFFIC AWARENESS OF ROADWAY CONDITIONS. (NO SEPARATE PAYMENT).
10. CONTRACTOR SHALL PROVIDE SECURITY FENCING, SECURITY GUARD, AND ANY AND ALL OTHER MEASURES CONTRACTOR DEEMS NECESSARY TO PROTECT EQUIPMENT AND MATERIALS STORED ON THE PROJECT. (NO SEPARATE PAYMENT).
11. WHERE CONTRACTOR CEASES WORK OPERATIONS FOR A 72 HOUR PERIOD OR LONGER, SUCH AS HOLIDAYS, ETC., THE FOLLOWING SHALL BE ACCOMPLISHED PRIOR TO THE WORK STOPPAGE.
    A. CONTRACTOR SHALL STORE ALL EQUIPMENT IN THE CONTRACTOR STAGING AREA OR OFF SITE.
    B. THE CONTRACTOR SHALL SWEEP ALL STREETS, PERFORM GENERAL CLEANUP AND SHALL PERFORM MAINTENANCE ON ALL EXPOSED PATCHES.
12. CONTRACTOR SHALL SCHEDULE WORK AND MATERIAL DELIVERIES SO THAT STORED MATERIAL QUANTITIES ON THE JOB SITE SHALL BE MINIMIZED.
13. CONTRACTOR SHALL STORE ALL MATERIALS IN THE CONTRACTOR STAGING AREA 72 HOURS PRIOR TO INCORPORATING INTO THE WORK TO REDUCE OBSTRUCTIONS TO TRAFFIC AND INCONVENIENCE TO RESIDENTS. WHERE UTILITIES ARE BEING CONSTRUCTED IN EASEMENTS OUT OF TRAFFIC AREAS CONTRACTOR MAY STORE MATERIALS AHEAD OF CONSTRUCTION FOR A DISTANCE NOT GREATER THAN 1800 FEET UNLESS APPROVED OTHERWISE BY THE ENGINEER.
14. CLEARING AND GRUBBING SHALL BE RESTRICTED TO PERMANENT EASEMENTS ONLY. CONTRACTOR SHALL LIMIT TREE/BUSH CLEARING IN THE TEMPORARY EASEMENTS, BETWEEN HOUSES AND ALONG PROPERTY LINES TO ONLY ABSOLUTELY NECESSARY FOR CONSTRUCTION.

RELATION OF WATER MAINS TO SEWERS

(A) LATERAL SEPARATION OF SEWERS AND WATER MAINS. WATER MAINS SHALL BE LAID AT LEAST 10 FEET LATERALLY FROM EXISTING OR PROPOSED SEWERS, UNLESS LOCAL CONDITIONS OR BARRIERS PREVENT A 10-FOOT LATERAL SEPARATION--IN WHICH CASE:
(1) THE WATER MAIN IS LAID IN A SEPARATE TRENCH, WITH THE ELEVATION OF THE BOTTOM OF THE WATER MAIN AT LEAST 18 INCHES ABOVE THE TOP OF THE SEWER; OR
(2) THE WATER MAIN IS LAID IN THE SAME TRENCH AS THE SEWER WITH THE WATER MAIN LOCATED AT ONE SIDE ON A BENCH OF UNDISTURBED EARTH, AND WITH THE ELEVATION OF THE BOTTOM OF THE WATER MAIN AT LEAST 18 INCHES ABOVE THE TOP OF THE SEWER.

(B) CROSSING A WATER MAIN OVER A SEWER. WHENEVER IT IS NECESSARY FOR A WATER MAIN TO CROSS OVER A SEWER, THE WATER MAIN SHALL BE LAID AT SUCH AN ELEVATION THAT THE BOTTOM OF THE WATER MAIN IS AT LEAST 18 INCHES ABOVE THE TOP OF THE SEWER, UNLESS LOCAL CONDITIONS OR BARRIERS PREVENT AN 18 INCH VERTICAL SEPARATION--IN WHICH CASE BOTH THE WATER MAIN AND SEWER SHALL BE CONSTRUCTED OF FERROUS MATERIALS AND WITH JOINTS THAT ARE EQUIVALENT TO WATER MAIN STANDARDS FOR A DISTANCE OF 10 FEET ON EACH SIDE OF THE POINT OF CROSSING.

(C) CROSSING A WATER MAIN UNDER A SEWER. WHENEVER IT IS NECESSARY FOR A WATER MAIN TO CROSS UNDER A SEWER, BOTH THE WATER MAIN AND SEWER SHALL BE CONSTRUCTED OF FERROUS MATERIALS AND WITH JOINTS EQUIVALENT TO WATER MAIN STANDARDS FOR A DISTANCE OF 10 FEET ON EACH SIDE OF THE POINT OF CROSSING. A SECTION OF WATER MAIN PIPE SHALL BE CENTERED AT THE POINT OF CROSSING.

CONSTRUCTION SEQUENCE NOTES

1. PRIOR TO COMMENCEMENT OF ANY WORK WITHIN EASEMENTS OR RIGHTS-OF-WAYS THE CONTRACTOR IS REQUIRED TO NOTIFY CONCERNED UTILITY COMPANIES IN ACCORDANCE WITH GS 87-102. CONTRACTOR SHALL VERIFY LOCATION OF EXISTING UTILITIES PRIOR TO BEGINNING CONSTRUCTION. NO SEPARATE PAYMENT. EXISTING UTILITIES SHOWN ARE TAKEN FROM MAPS FURNISHED BY VARIOUS UTILITY COMPANIES AND HAVE NOT BEEN PHYSICALLY LOCATED (I.E. TELEPHONE, GAS, CABLE, ETC.).

2. THE CONTRACTOR SHALL DIG UP EACH UTILITY WHICH MAY CONFLICT WITH CONSTRUCTION 14 DAYS IN ADVANCE TO VERIFY LOCATIONS (HORIZONTALLY AND VERTICALLY) TO ALLOW THE ENGINEER AN OPPORTUNITY TO ADJUST THE DESIGN TO AVOID CONFLICTS (NO SEPARATE PAYMENT).

3. ALL SANITARY SEWER & WATER CONSTRUCTION SHALL BE IN ACCORDANCE WITH STANDARDS AND SPECIFICATIONS OF THE NCDENR-DWQ & NCDENR-PWS. STORM DRAINAGE, STREET CONSTRUCTION AND PAVING SHALL BE IN ACCORDANCE WITH THE N.C.D.O.T.

4. UTILITY SERVICES TO INDIVIDUAL PROPERTIES ARE NOT SHOWN IN THE PROFILES FOR SIMPLICITY OF THE DRAWINGS. SERVICES MAY INCLUDE WATER LATERALS, TELEPHONE, ELECTRIC, CABLE, GAS, ETC.

5. CONTRACTOR SHALL COORDINATE WITH UTILITY OWNER AND BE RESPONSIBLE FOR TEMPORARY RELOCATION AND/OR SECURING EXISTING UTILITY POLES AND SIGNS AND/OR UTILITIES IN ACCORDANCE WITH UTILITY OWNER REQUIREMENTS DURING THE UTILITY MAIN INSTALLATION AND STREET CONSTRUCTION. (NO SEPARATE PAYMENT).

6. CONTRACTOR SHALL PROVIDE TEMPORARY SUPPORTS FOR UTILITY CROSSINGS AND REPAIR DAMAGES DUE TO CONSTRUCTION TO THE SATISFACTION OF THE UTILITY INVOLVED AT NO ADDITIONAL EXPENSE TO THE OWNER. UNDERGROUND ELECTRICAL CROSSINGS SHALL BE CROSSED IN ACCORDANCE WITH THE NEC AND TECHNICAL SPECIFICATION SECTION UNDERGROUND ELECTRICAL CROSSING

7. WHERE DEEMED NECESSARY BY THE ENGINEER THAT A SUBSURFACE DRAINAGE SYSTEM IS REQUIRED, THE CONTRACTOR SHALL PROVIDE ALL MATERIALS, TOOLS, LABOR, EQUIPMENT, TIE-IN'S TO EXISTING DRAINAGE STRUCTURES AND ALL OTHER INCIDENTALS NECESSARY TO PROVIDE COMPLETE INSTALLATION. IMPROPERLY INSTALLED AND NON-FUNCTIONING DRAINAGE SHALL BE REMOVED AND REPLACED AT THE CONTRACTOR'S EXPENSE. EXISTING FRENCH DRAINAGE DAMAGED DURING CONSTRUCTION SHALL BE REPLACED AND OR REPAIRED AT NO ADDITIONAL EXPENSE TO THE OWNER.

8. STORM DRAINAGE REPAIRS BY CONTRACTOR DUE TO CONSTRUCTION DAMAGE AND JOINTS EXPOSED DURING CONSTRUCTION SHALL BE INSPECTED BY THE OWNER PRIOR TO BACKFILLING.

9. CONTRACTOR SHALL PROVIDE ALL LABOR, EQUIPMENT AND MATERIAL AND PERFORM ALL WORK REQUIRED FOR INSTALLATION OF SEWER LINES, MANHOLES AND APPURTENANCES AS OUTLINED ON DRAWINGS AND ON SPECIFICATIONS, ALL OF WHICH BECOME PART OF THE CONTRACT DOCUMENTS.

10. ALL CONSTRUCTION OF SANITARY SEWER MAINS AND APPURTENANCES IN THE COLLECTION SYSTEMS SHALL BE IN STRICT ACCORDANCE WITH PLANS AND SPECIFICATIONS PREPARED AS PART OF THE CONTRACT DOCUMENTS AND AS APPROVED BY THE BPG, INC. ENGINEER. ALL MATERIALS SHALL BE NEW AND UNUSED. PRIOR TO CONSTRUCTION OF THE APPROVED SANITARY SEWER, CONTRACTOR SHALL PROVIDE FIELD STAKEOUT INCLUDING ADEQUATE LINE AND GRADE STAKES IN ORDER THAT SANITARY SEWER AND APPURTENANCES MAY BE CONSTRUCTED IN ACCORDANCE WITH CONTRACT DRAWINGS.

11. A PRECONSTRUCTION CONFERENCE SHALL BE HELD AT THE COMPLETION OF THE FIELD STAKEOUT WITH THE ENGINEEER AN HIS/HER REPRESENTATIVE, CURRITUCK COUNTY REPRESENTATIVE, NCDENR REPRESENTATIVE, AND ANY REQUISITE UTILITY REPRESENTATIVES THAT WILL REQUIRE COORDINATION WITH DURING THE COURSE OF CONSTRUCTION. A MINIMUM OF 2 DAYS NOTICE SHALL BE GIVEN FOR MEETING REPRESENTATIVES.

12. PREPARE PHOTOGRAPHIC DOCUMENTATION OF PRE-EXISTING CONDITIONS OF THE PROJECTED CONSTRUCTION ROUTE PRIOR TO COMMENCING WORK.

13. IF ANY DEVIATION IS CONTEMPLATED IN LOCATION OR LINE GRADE OF ANY SEWER, STRUCTURE OR APPURTENANCE AS SHOWN ON THE CONTRACT DRAWINGS, A REVISION OF THE DRAWINGS SHOWING THE PROPOSED DEVIATION SHALL BE SUBMITTED TO THE BPG, INC. ENGINEER FOR REVIEW AND APPROVAL BEFORE ANY CHANGES ARE CONSTRUCTED. MINOR FIELD CHANGES MAY BE MADE WITH APPROVAL OF BPG, INC. APPOINTED FIELD INSPECTOR. SHOULD CONTRACTOR DISCOVER AND/OR DAMAGE ANY UNDERGROUND UTILITY FACILITIES, WHICH ARE NOT SHOWN ON DRAWINGS AND/OR MARKED ON THE GROUND, CONTRACTOR SHALL PROMPTLY NOTIFY UTILITY OWNER AND OWNER'S PROJECT REPRESENTATIVE. RELOCATION OF ANY UTILITIES SHALL BE APPROVED AND COORDINATED WITH THE APPROPRIATE UTILITY OWNER.

14. EXCAVATION SHALL CONFORM TO THE LINES AND GRADES SHOWN ON THE PLANS. THE WIDTH OF EXCAVATION FOR TRENCHES SHALL BE A MINIMUM OF 24". EXCAVATION SHALL NOT BE CARRIED BELOW THE ESTABLISHED GRADES AND ANY EXCAVATION BELOW THE REQUIRED LEVEL SHALL BE BACKFILLED WITH SUITABLE, THOROUGHLY COMPACTED GRANULAR BEDDING MATERIAL. CONTRACTOR SHALL INSTALL ALL SHEETING, BRACING, AND SHORING NECESSARY TO PERFORM THE WORK, TO PROTECT EXISTING STRUCTURES AND ALL EXCAVATIONS AS REQUIRED UNDER NORTH CAROLINA OSHA REGULATIONS. COMPLIANCE WITH PROVISIONS OF THE OVERHEAD HIGH VOLTAGE LINE SAFETY ACT IS REQUIRED.

15. DEWATERING EQUIPMENT SHALL BE SIZED TO MAINTAIN THE TRENCH IN A SATISFACTORY DEWATERED CONDITION SUITABLE FOR PIPE LAYING AND BACKFILLING. PIPE LAYING WILL BE PERMITTED ONLY WHERE THE DEPTH OF WATER IS MAINTAINED BELOW THE BEDDING MATERIAL. BEDDING MATERIAL SHALL NOT BE PLACED ON UNSTABLE TRENCH MATERIAL.

16. NOT MORE THAN ONE HUNDRED FIFTY FEET (150') OF TRENCH SHALL BE OPENED IN ADVANCE OF THE COMPLETED PIPE LAYING. TRENCH WALLS SHALL BE PROTECTED IN ACCORDANCE WITH CURRENT OSHA REGULATIONS. EXCAVATION AT MANHOLES AND SIMILAR STRUCTURES SHALL PROVIDE A MINIMUM CLEARANCE OF EIGHTEEN INCHES (18") BETWEEN THE OUTER SURFACE OF THE STRUCTURE AND THE EMBANKMENT OR SHEETING.

17. WHEREVER FOUNDATION MATERIAL IS UNSUITABLE, IT SHALL BE EXCAVATED UNTIL A STABLE FOUNDATION IS ACHIEVED. GRANULAR MATERIAL, #67 STONE PER ASTM C 12, SHALL THEN BE PLACED IN SIX INCH (6") LAYERS AND COMPACTED UNTIL THE TRENCH BOTTOM HAS BEEN STABILIZED. STANDARD GRANULAR PIPE BEDDING MATERIAL SHALL BE PLACED IN ACCORDANCE WITH ASTM D 2321 FOR PVC PIPE AND ASTM C 12 FOR DIP.

18. ALL GRAVITY SEWER MAINS, SERVICE LATERALS AND FORCE MAINS SHALL HAVE A MINIMUM COVER OF THREE FEET (3') AS MEASURED FROM TOP OF PIPE TO FINISH GRADE. THE BPG, INC. ENGINEER MAY REQUIRE ADDITIONAL COVER AS NEEDED FOR PIPE PROTECTION. SEWERS, WHICH HAVE A DEPTH OF COVER LESS THAN THREE FEET (3'), SHALL BE APPROVED AND INSTALLED AS PER BPG, INC. ENGINEER'S WRITTEN INSTRUCTIONS.

19. PIPE SHALL BE LAID TRUE TO LINE AND GRADE WITH BELLS UPSTREAM AND SHALL BE JOINTED TOGETHER SUCH THAT THE COMPLETED PIPE WILL HAVE A SMOOTH INVERT. PIPE SHALL BE PUSHED HOME BY HAND. THE USE OF EQUIPMENT (I.E. BACKHOE) SHALL NOT BE PERMITTED. CUTTING OF PIPE SHALL BE PERFORMED BY SAWING. STANDARD BEDDING SHALL BE SHAPED TO THE CURVATURE OF BOTH THE BELL AND BARREL OF THE PIPE. THE TRENCH SHALL BE KEPT FREE OF WATER WHILE THE WORK IS IN PROGRESS. THE ENDS OF THE PIPE SHALL BE CLEANED SO THAT PROPER JOINTS CAN BE MADE. AS THE WORK PROGRESSES, THE INTERIOR OF THE PIPE SHALL BE CLEARED OF DIRT, CEMENT, OR OTHER DELETERIOUS MATERIAL.

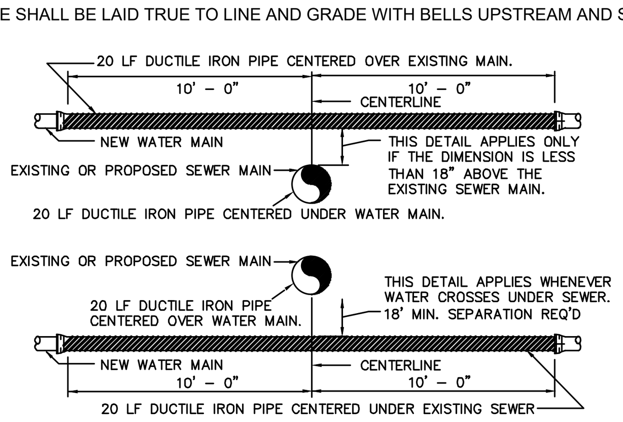

WATER CROSSING SEWER DETAIL

20. EXCEPT AS REQUIRED FOR USE OF A LASER LEVEL, EXPOSED END OF ALL PIPE AND FITTINGS SHALL BE FULLY CLOSED TO PREVENT EARTH, WATER OR OTHER SUBSTANCES FROM ENTERING PIPE. TRENCH SHALL BE COMPLETELY BACKFILLED AT END OF EACH WORKDAY. WHEN NEW PIPE IS TIED INTO AN EXISTING MANHOLE, NEW PIPE SHALL BE PLUGGED WITH A STANDARD SEWER PLUG AND SHALL REMAIN PLUGGED UNTIL ALL NEW LINE(S) THAT WILL FLOW TO EXISTING MANHOLE HAVE BEEN COMPLETED, TESTED, AND ACCEPTED.

21. BACKFILL SHALL BEGIN AT THE TOP OF THE STANDARD GRANULAR BEDDING AND SHALL BE PLACED IN SIX INCH (6") LAYERS FOR THE INITIAL ONE FOOT OVER THE PIPE AND SHALL BE THOROUGHLY TAMPED TO NINETY-FIVE PERCENT (95%) OF THE MAXIMUM THEORETICAL COMPACTION DENSITY AS DETERMINED BY A STANDARD PROCTOR ON THE MATERIAL. REMAINDER OF THE BACKFILL SHALL BE IN TWO FOOT (2') LAYERS PROPERLY TAMPED.

22. COMPLETION: BEFORE CONNECTING TO AN ACTIVE SYSTEM, THE LEAKAGE TESTS SHALL PROMPTLY FOLLOW INSTALLATION OF WASTEWATER PIPE INCLUDING SERVICES AND KEPT WITHIN A MAXIMUM OF 1000 FEET BEHIND THE WASTEWATER PIPE LAYING OPERATION.

23. CONTRACTOR SHALL FURNISH WEIRS, STAND PIPES, PIPE PLUGS, WATER, PRESSURE GAUGES, STOP WATCHES, AIR COMPRESSOR, VACUUM PUMP, HOSE AND SUCH MATERIALS AND ASSISTANCE AS REQUIRED TO PERFORM THESE TESTS. ALL ACCEPTANCE TESTS SHALL BE CONDUCTED BY CONTRACTOR IN THE PRESENCE OF A BPG, INC. APPOINTED INSPECTOR.

24. ACCEPTANCE TESTS SHALL NOT BE MADE UNTIL SANITARY SEWER, MANHOLES AND PROPOSED SEWER SERVICE CONNECTIONS, AS SHOWN ON THE APPROVED SEWER PLANS, HAVE BEEN INSTALLED, THE SEWER TRENCHES (INCLUDING MANHOLES AND CLEANOUT STACKS) BACKFILLED AND COMPACTED TO FINISHED SUB-GRADE.

25. CONTRACTOR SHALL BE RESPONSIBLE AT ALL TIMES FOR MAINTAINING SEWER FLOWS DURING PROJECT TO INCLUDE ANY REQUIRED BY-PASS PUMPING OF WASTEWATER BETWEEN MANHOLES DURING INSTALLATION OF SEWER LINES AND/OR MANHOLES. BY-PASS PUMPING SYSTEM SHALL PROVIDE CONTINUOUS FULL CONVEYANCE AND CONTAINMENT OF WASTEWATER PRESENT DURING THE WORK AND SHALL NOT SURCHARGE THE UPSTREAM PUMP STATION BY MORE THAN TWO (2) FEET ABOVE THE NORMAL EFFLUENT LEVELS.

26. ONCE ACCEPTANCE AND START OF THE COLLECTION SYSTEM HAS BEEN RECIEVED, THE CONTRACTOR SHALL PROCEED WITH THE ABANDONMENT PROCEDURES OF THE EXISTING WASTEWATER COLLECTION SYSTEM AS DESCRIBED HEREON.

27. THE NOTES CONTAINED HEREIN ARE INTENDED TO SUPPLEMENT THE TECHNICAL SPECIFICATIONS AND PROVIDE EASY REFERENCE FOR THE CONTRACTOR. IN NO CASE SHALL THESE NOTES VOID ANY PART, SECTION OR REQUIREMENT OUTLINED IN THE TECHNICAL SPECIFICATIONS CONTAINED IN THE CONTRACT DOCUMENTS.

TRENCH DEWATERING DURING SEWER LINE INSTALLATION

1. ALL GROUND WATER WHICH MAY BE FOUND IN THE TRENCHES AND ANY WATER WHICH MAY GET INTO THEM FROM ANY CAUSE WHATSOEVER SHALL BE PUMPED OR BAILED OUT SO THAT THE TRENCH SHALL BE DRY DURING THE PIPE LAYING PERIOD. NO WATER SHALL BE PERMITTED TO REACH CONCRETE UNTIL IT HAS SET SUFFICIENTLY. ALL WATER PUMPED FROM THE TRENCHES SHALL BE DISPOSED OF IN A MANNER SATISFACTORY TO THE OWNER. CONTRACTOR SHALL PROVIDE AT LEAST TWO (2) PUMPS FOR EACH TRENCH OPENED IN WET GROUND AND AT THE SAME TIME, HE SHALL HAVE ONE (1) PUMP IN RESERVE.

2. IF, DURING ANY TIME THAT CONTRACTOR IS PERMITTED TO LAY PIPE IN A TRENCH CONTAINING UNAVOIDABLE TRENCH WATER AND CONSTRUCTION IS INTERRUPTED FOR ANY REASON, THE OPEN ENDS OF PIPE SHALL BE CLOSED BY WATERTIGHT PLUGS OR CAPS, OR OTHER MEANS APPROVED BY THE OWNER. IN ANY CASE, SUCH PROTECTION SHALL BE PROVIDED WHEN WORK IS SUSPENDED OVERNIGHT OR ON WEEKENDS AND HOLIDAYS, REGARDLESS OF THE CONDITION OF THE TRENCH WITH RESPECT TO WATER AT THE TIME THAT THE WORK IS SUSPENDED

3. CONTRACTOR SHALL BE RESPONSIBLE FOR THE PROTECTION OF ALL STRUCTURES, INCLUDING PIPES AND MANHOLES, AGAINST ANY TENDENCY TO FLOAT UNDER CONDITIONS OF HIGH WATER, WHETHER DUE TO HIGH GROUND WATER OR FLOOD CONDITIONS ON THE PROJECT SITE. IT SHALL BE THE RESPONSIBILITY OF THE CONTRACTOR TO TAKE WHATEVER STEPS MAY BE REQUIRED, INCLUDING THE INSTALLATION AND OPERATION OF PUMPS AND PUMPING SYSTEMS, WELL POINTS OR RELIEF DEVICES, TO PREVENT ANY STRUCTURE FROM FLOATING DURING CONSTRUCTION.

4. COST OF THE NECESSARY PUMPS, WELL POINTS OR OTHER APPURTENANCES REQUIRED TO PREVENT FLOTATION SHALL BE INCLUDED IN THE UNIT PRICES BID IN THE PROPOSAL FOR THE VARIOUS BID ITEMS, AND NO EXTRA COMPENSATION SHALL BE ALLOWED FOR SUCH WORK. ANY DAMAGE WHICH MAY OCCUR TO ANY PART OF THE WORK AS THE RESULT OF THE FLOTATION EFFECT OF GROUND OR FLOOD WATERS SHALL BE REPAIRED IN A MANNER FULLY SATISFACTORY TO THE OWNER, AT NO ADDITIONAL COST TO THE OWNER.

5. CONTRACTOR SHALL PROVIDE AND PLACE ALL NECESSARY FLUMES OR OTHER CHANNELS OF ADEQUATE SIZE TO CARRY TEMPORARILY ALL STREAMS, BROOKS, STORMWATER OR OTHER WATER, WHICH MAY FLOW ALONG OR ACROSS THE LINES OF THE PIPE LINE. ALL FLUMES OR CHANNELS THUS UTILIZED SHALL BE TIGHT SO AS TO PREVENT LEAKAGE INTO THE TRENCHES. WATER PUMPED FROM TRENCHES SHALL BE LED TO NATURAL WATERCOURSES. EXISTING SEWERS SHALL NOT BE EMPLOYED AS A DRAIN FOR THE REMOVAL OF DEWATERING WASTES.

SEWER SERVICE LATERAL NOTES

1. CONTRACTOR SHALL MAKE UP STACK AND SUBMIT TO ENGINEER FOR APPROVAL AND SHALL SUBMIT TAPPING SADDLE IF USED TO ENGINEER FOR APPROVAL.
2. HOLE IN SANITARY SEWER MAIN MUST BE CUT WITH SHELL CUTTER. NO HAMMER TAPS ALLOWED.
3. LATERAL SHALL CONFORM TO ASTM SPECS. D-3034 SDR-35 UNLESS OTHERWISE INDICATED AS DUCTILE IRON.
4. ALL PIPE AND FITTINGS SHALL BE 4" OR 6" UNLESS OTHERWISE SPECIFIED.
5. ALL D.I. PIPE SHALL HAVE AN INTERIOR LINING OF CERAMIC EPOXY OR FUSED CALCIUM ALUMINATE CEMENT WITH FUSED CALCIUM ALLUMINATE AGGREGATES. THE ENTIRE D.I. LATERAL SHALL BE COMPRISED OF D.I. PIPE AND MECHANICAL JOINT FITTINGS.
6. ALL CONNECTIONS SHALL HAVE RUBBER GASKET SEALS INSTALLED.
7. THE CONTRACTOR SHALL USE SDR 35 P.V.C. WYE FOR CONNECTION TO SDR 35 P.V.C. PIPE OR DI TEE FOR CONNECTION TO DUCTILE IRON PIPE. PVC WYE SHALL BE ONE PIECE MOLDED OR FABRICATED.
8. INSTALLATION OTHER THAN AS SHOWN MUST BE ENGINEER APPROVED
9. TAPPING PROCESS SHOWN SHALL BE USED FOR ALL SANITARY SEWER MAINS.
10. SLOPE AND DEPTH OF THE SERVICE LATERAL SHALL BE DETERMINED BY THE TOPOGRAPHY OF THE LOT AS APPROVED BY THE ENGINEER OR AS INDICATED ON THE DRAWINGS.
11. SLOPE OF LATERALS SHALL CONFORM TO 1/4" PER FOOT MIN. FOR 4" PIPE AND 1/8" PER FOOT MIN. FOR 6" PIPE. MAXIMUM CLEAN OUT SPACING FOR 4" PIPE IS 75', 100' FOR 6" PIPE
12. ENTIRE SEWER LATERAL ASSEMBLY SHALL BE AIR TESTED CONCURRENTLY WITH SEWER MAIN.
13. INDIVIDUAL LATERALS SHALL BE CLEANED AND FLUSHED PRIOR TO FLUSHING SANITARY SEWER MAINS.
14. LATERAL SHALL NOT BE BACK-FILLED UNTIL INSPECTED BY THE PROJECT ENGINEER OR HIS REPRESENTATIVE.
15. WYE CONNECTIONS SHALL NOT BE USED TO TIE LATERALS INTO A MANHOLE, UNLESS OTHERWISE APPROVED BY ENGINEER.
16. IF BENDS ARE APPROVED BY THE PROJECT ENGINEER, STONE BEDDING IS REQUIRED TO BE INSTALLED FROM UNDISTURBED SOIL TO BOTTOM OF BEND.
17. PVC COMBINATION SHALL BE 2 PIECE TEE-WYE, GASKETED, SDR35, AS MANUFACTURED BY HARCO, GPK OR APPROVED EQUAL.

UTILITY GENERAL NOTES

1. PRIOR TO COMMENCEMENT OF ANY WORK WITHIN EASEMENTS OR RIGHTS-OF-WAYS THE CONTRACTOR IS REQUIRED TO NOTIFY CONCERNED UTILITY COMPANIES IN ACCORDANCE WITH GS 87-102. CONTRACTOR SHALL VERIFY LOCATION OF EXISTING UTILITIES PRIOR TO BEGINNING CONSTRUCTION. NO SEPARATE PAYMENT. EXISTING UTILITIES SHOWN ARE TAKEN FROM MAPS FURNISHED BY VARIOUS UTILITY COMPANIES AND HAVE NOT BEEN PHYSICALLY LOCATED (i.e. TELEPHONE, GAS, CABLE, ETC.).

2. THE CONTRACTOR SHALL DIG UP EACH UTILITY WHICH MAY CONFLICT WITH CONSTRUCTION 14 DAYS IN ADVANCE TO VERIFY LOCATIONS (HORIZONTALLY AND VERTICALLY) TO ALLOW THE ENGINEER AN OPPORTUNITY TO ADJUST THE DESIGN TO AVOID CONFLICTS (NO SEPARATE PAYMENT).

3. ALL SANITARY SEWER & WATER CONSTRUCTION SHALL BE IN ACCORDANCE WITH STANDARDS AND SPECIFICATIONS OF THE NCDENR-DWQ & NCDENR-PWS. STORM DRAINAGE, STREET CONSTRUCTION AND PAVING SHALL BE IN ACCORDANCE WITH THE N.C.D.O.T.

4. UTILITY SERVICES TO INDIVIDUAL PROPERTIES ARE NOT SHOWN IN THE PROFILES FOR SIMPLICITY OF THE DRAWINGS. SERVICES MAY INCLUDE WATER LATERALS, TELEPHONE, ELECTRIC, CABLE, GAS, ETC.

5. CONTRACTOR SHALL COORDINATE WITH UTILITY OWNER AND BE RESPONSIBLE FOR TEMPORARY RELOCATION AND/OR SECURING EXISTING UTILITY POLES AND SIGNS AND/OR UTILITIES IN ACCORDANCE WITH UTILITY OWNER REQUIREMENTS DURING THE UTILITY MAIN INSTALLATION AND STREET CONSTRUCTION. (NO SEPARATE PAYMENT).

6. CONTRACTOR SHALL PROVIDE TEMPORARY SUPPORTS FOR UTILITY CROSSINGS AND REPAIR DAMAGES DUE TO CONSTRUCTION TO THE SATISFACTION OF THE UTILITY INVOLVED AT NO ADDITIONAL EXPENSE TO THE OWNER. UNDERGROUND ELECTRICAL CROSSINGS SHALL BE CROSSED IN ACCORDANCE WITH THE NEC AND TECHNICAL SPECIFICATION SECTION UNDERGROUND ELECTRICAL CROSSING

7. WHERE DEEMED NECESSARY BY THE ENGINEER THAT A SUBSURFACE DRAINAGE SYSTEM IS REQUIRED, THE CONTRACTOR SHALL PROVIDE ALL MATERIALS, TOOLS, LABOR, EQUIPMENT, TIE-IN'S TO EXISTING DRAINAGE STRUCTURES AND ALL OTHER INCIDENTALS NECESSARY TO PROVIDE COMPLETE INSTALLATION IN ACCORDANCE WITH CITY OF FAYETTEVILLE STANDARDS. IMPROPERLY INSTALLED AND NON-FUNCTIONING DRAINAGE SHALL BE REMOVED AND REPLACED AT THE CONTRACTOR'S EXPENSE. EXISTING FRENCH DRAINAGE DAMAGED DURING CONSTRUCTION SHALL BE REPLACED AND OR REPAIRED AT NO ADDITIONAL EXPENSE TO THE OWNER.

8. ANY DRIVEWAY CULVERTS DAMAGED DURING CONSTRUCTION SHALL BE EITHER REPAIRED OR REPLACED AT CONTRACTOR'S EXPENSE. FILTER FABRIC CLOTH SHALL BE PLACED OVER EITHER CULVERT ENDS DURING THE COURSE OF CONSTRUCTION. ALL EX. DRAINAGE INFRASTRUCTURE WILL BE RETURNED TO PRE-EXISTING CONDITIONS PRIOR TO FINAL PROJECT APPROVALS.

GENERAL NOTES SANITARY SEWER UTILITY

1. CLEANOUT ELEVATIONS AND/OR LOCATIONS MAY BE ADJUSTED IN THE FIELD AS DIRECTED BY THE ENGINEER WHEN NECESSARY. CLEANOUT STACK TOP ELEVATION IS DETERMINED BY INTERPOLATING FIELD DATA AND MAY NOT BE EXACT. CLEANOUT ELEVATION TOP SHALL BE SET IN ACCORDANCE WITH THE TYPICAL DETAIL DESCRIBED HEREON. (NO SEPARATE PAYMENT).

2. WHERE SANITARY SEWER MAINS ARE TO BE CONSTRUCTED WITHIN 20' OF EXISTING RESIDENCES SPECIAL CONSIDERATION SHALL BE GIVEN TO MINIMIZE UNDERMINING OR OTHERWISE DISTURBING EXISTING RESIDENCES ADJACENT TO THE SEWER MAIN. THE CONTRACTOR SHALL USE A RUBBER TIRED BACK HOE AND NO MECHANICAL COMPACTION EQUIPMENT IN THESE AREAS. THE TRENCH SHALL BE SHORED ADEQUATELY TO PREVENT ANY SLOTHING OF THE SIDE SLOPES. SUITABLE BACK FILL SHALL BE PLACED IN THE TRENCH. CONTRACTOR SHALL BE FULLY RESPONSIBLE FOR REPAIR OF STRUCTURES, FOUNDATIONS, FOOTINGS, ETC. DAMAGED DUE TO CONSTRUCTION.

3. SANITARY SEWER MANHOLE DEFLECTION ANGLE'S ARE 180 DEGREES UNLESS NOTED OTHERWISE. ALL INVERT ELEVATIONS ARE SHOWN TO THE MANHOLE CENTERLINE.

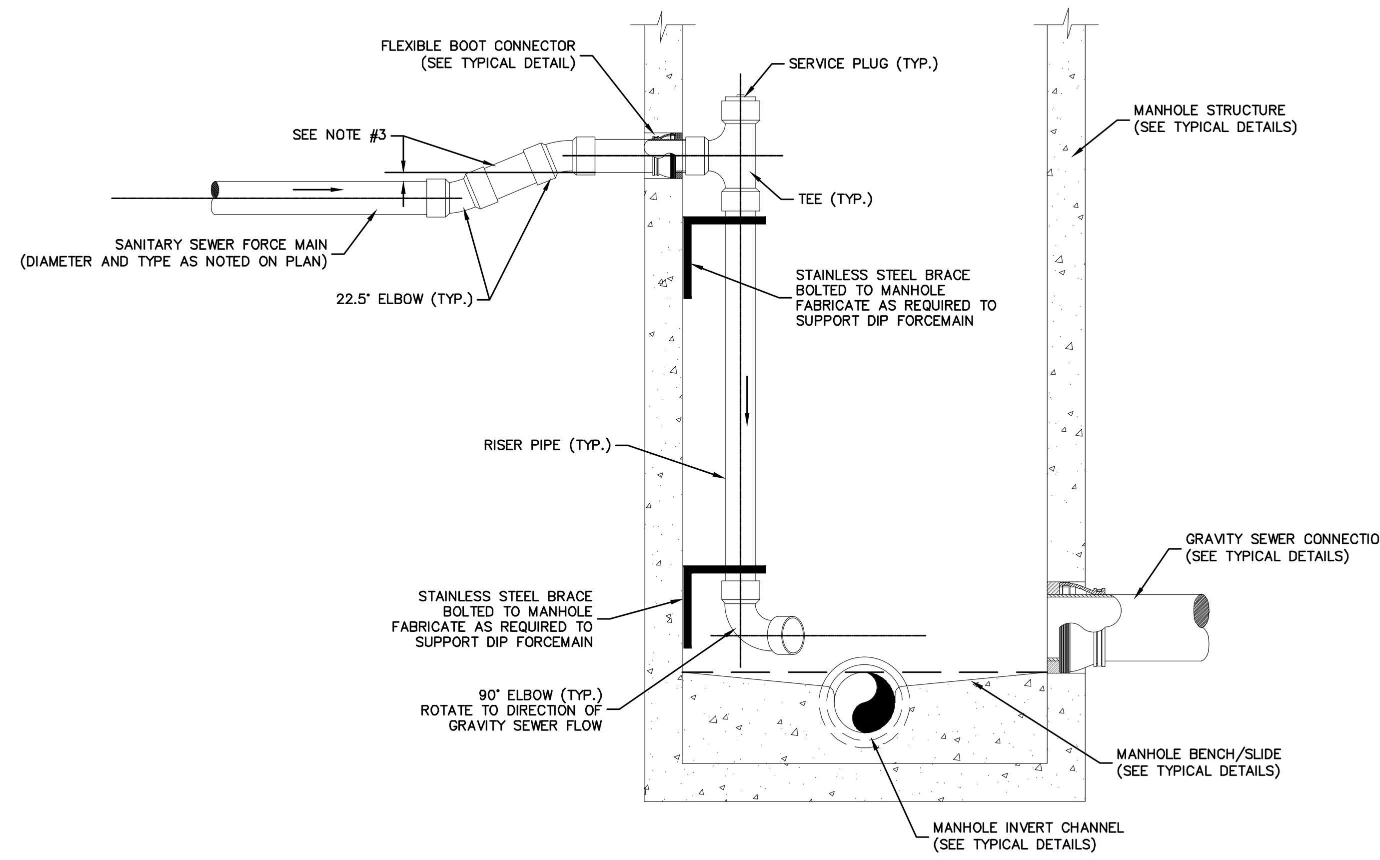

TYPICAL MANHOLE W/ FORCE MAIN CONNECTION DETAIL

NOT TO SCALE

NOTES
1. PIPE AND FITTINGS SHALL EQUAL SIZE AND TYPE OF FORCE MAIN
2. MANHOLE SHALL BE IDENTICAL TO STANDARD MANHOLE SPECIFICATIONS.
3. THE INLET PIPE INVERT SHALL BE EQUAL TO OR HIGHER IN ELEVATION THAN THE TOP OF THE FORCE MAIN PRIOR TO THE FIRST 22.5° ELBOW. THE LENGTH OF PIPE BETWEEN ELBOWS SHALL BE DETERMINED AS NECESSARY TO ACHIEVE THE CONDITION DESCRIBED ABOVE.

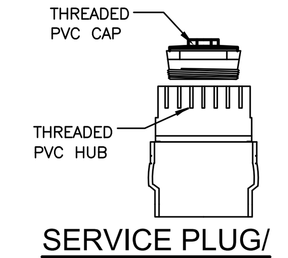

SERVICE PLUG/ C/O CAP ASSEMBLY

NOT TO SCALE — SEE CLEANOUT COVER ASSEMBLY DETAIL FOR USE IN TRAFFIC AREAS

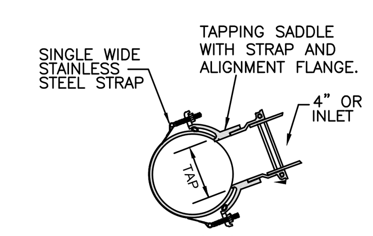

TAPPING SADDLE (OPTIONAL)

NOTE: TAP SHALL BE 4 1/2" FOR 4" LATERAL, AND SHALL BE 6 1/2" FOR 6" LATERAL.

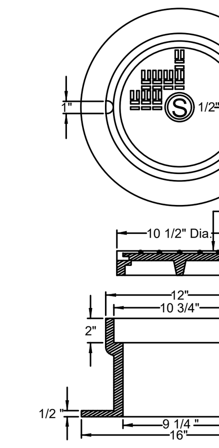

CLEANOUT COVER ASSEMBLY

NOT TO SCALE (FOR TRAFFIC AREAS)

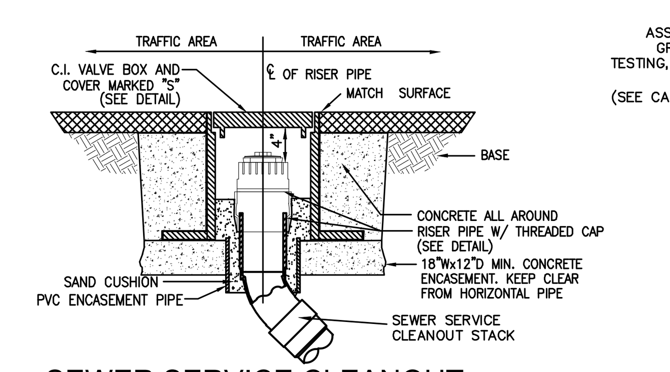

SEWER SERVICE CLEANOUT

NOT TO SCALE (FOR TRAFFIC AREAS)

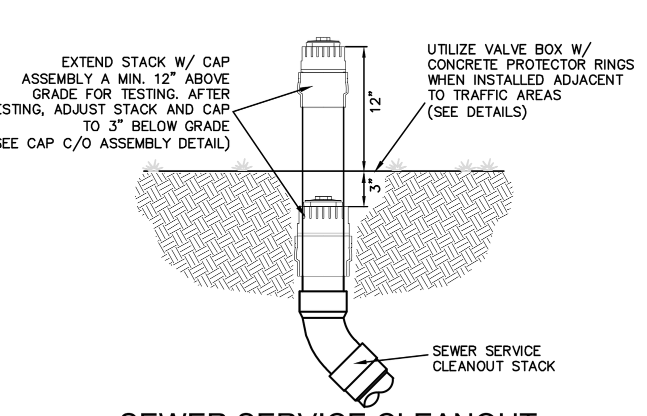

SEWER SERVICE CLEANOUT

NOT TO SCALE (FOR NON–TRAFFIC AREAS)

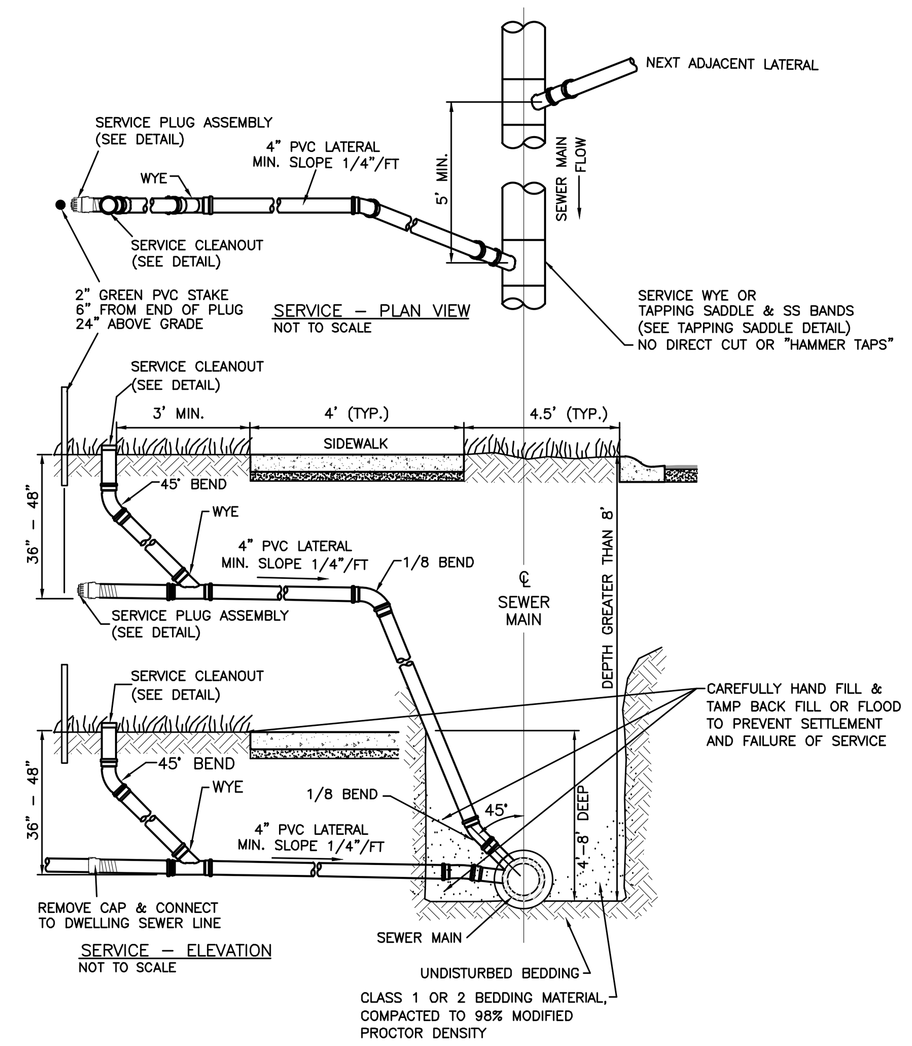

4"Ø LATERAL SEWER SERVICE CONNECTION DETAIL

NOT TO SCALE — LOCATIONS AS NOTED

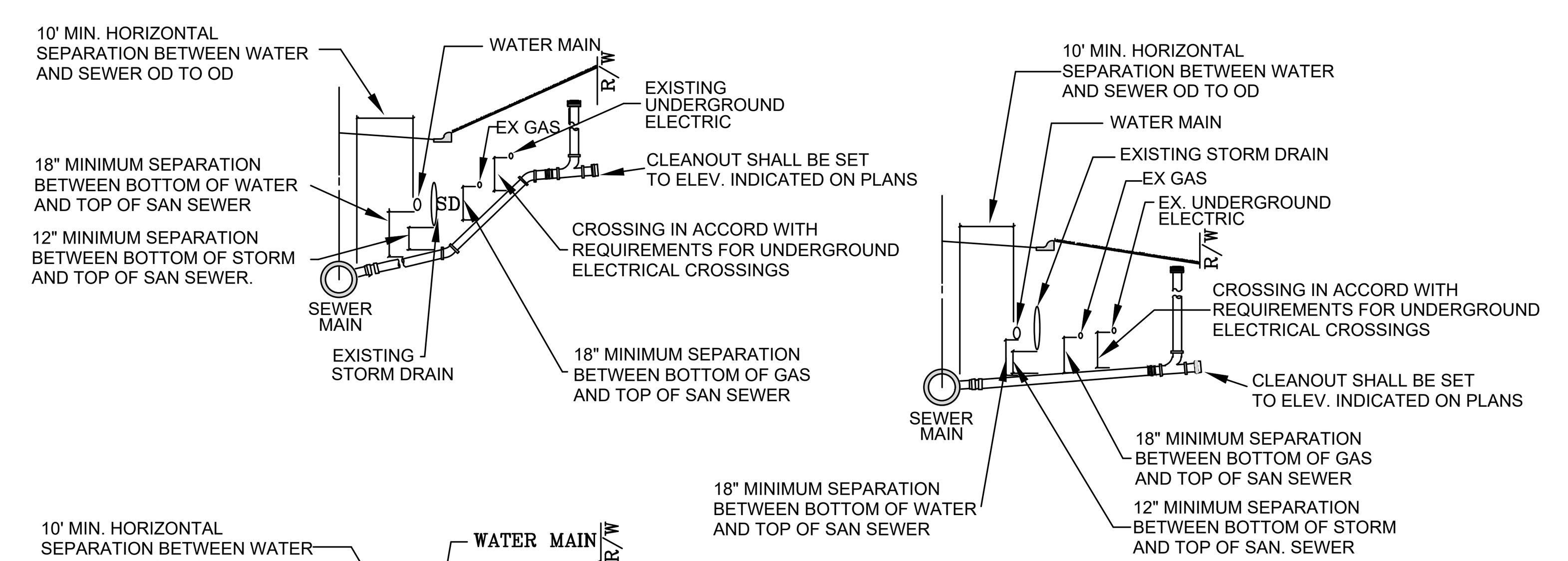

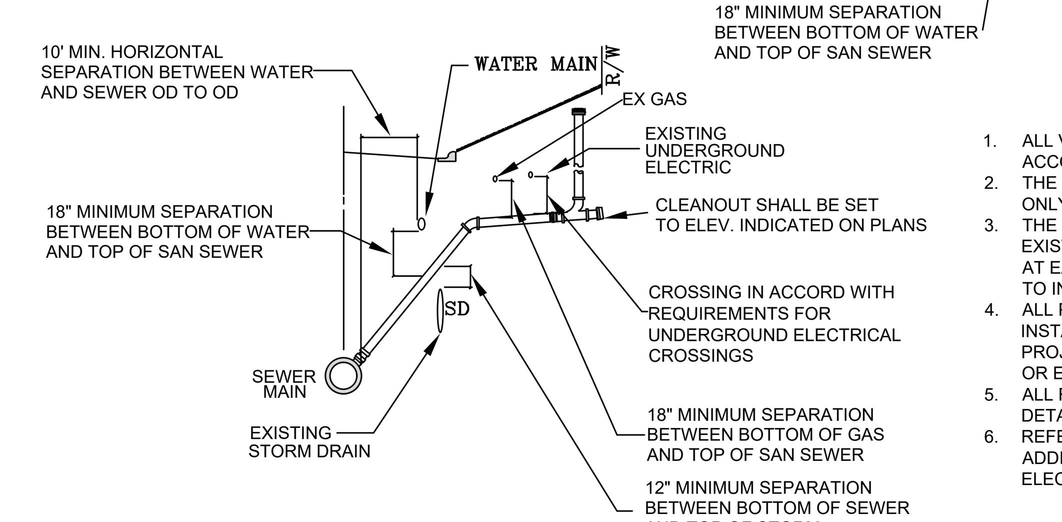

1. ALL VERTICAL AND HORIZONTAL SEPARATION SHALL BE IN ACCORDANCE WITH STATE REGULATIONS.
2. THE SKETCHES SHOWN ARE FOR INFORMATIONAL PURPOSES ONLY.
3. THE CONTRACTOR SHALL BE REQUIRED TO VERIFY ALL EXISTING UTILITIES BOTH HORIZONTALLY AND VERTICALLY AT EACH CROSSING PRIOR TO CONSTRUCTION OF LATERAL TO INSURE PROPER CLEARANCES ARE MAINTAINED.
4. ALL PIPE BEND LOCATIONS AND MAX. NUMBER OF BENDS INSTALLED ON LATERALS SHALL BE APPROVED BY THE PROJECT COORDINATOR PRIOR TO INSTALLATION OF BEND OR EXTENDING THE LATERAL FROM THE MAIN.
5. ALL REQUIREMENTS FOR SEWER LATERAL NOTES AND DETAILS SHALL BE APPLICABLE.
6. REFER TO UNDERGROUND ELECTRICAL DETAILS FOR ADDITIONAL INFORMATION WHEN CROSSING UNDERGROUND ELECTRICAL FACILITIES.

SEWER SERVICE LATERAL UTILITY CONFLICT SEPARATION REQUIREMENTS

NOT TO SCALE

Bissell Professional Group
Firm License # C-956
3512 North Croatan Highway
P.O. Box 1068
Kitty Hawk, North Carolina 27949
(252) 261-3266
FAX (252) 261-1760

BISSELL PROFESSIONAL GROUP
Engineers, Planners, Surveyors and Environmental Specialists

DETAILS

THIS DOCUMENT IS THE SOLE PROPERTY OF BPG, INC. OF KITTY HAWK, NORTH CAROLINA. THE REPRODUCTION, IN WHOLE OR PART, OR THE MODIFICATION OF ANY DETAIL OR DESIGN IS NOT TO BE MADE WITHOUT THE EXPRESS WRITTEN CONSENT OF MARK S. BISSELL, PRINCIPAL OF BPG, INC., COPYRIGHT 2005.

PROJECT:
THE FOST TRACT PD-R - PHASE 4
MOYOCK TOWNSHIP — CURRITUCK COUNTY — NORTH CAROLINA

RECORD DRAWINGS - PHASE 4

REVISIONS			
NO.	DATE	DESCRIPTION	BY

DocuSigned by: C6DA34EC9CBF428 (SEAL: NORTH CAROLINA PROFESSIONAL LAND SURVEYOR, MICHAEL D. BARR)

DATE: 11-06-23	SCALE: 1" = 30'
DESIGNED:	CHECKED: KFW
DRAWN: AKM	APPROVED: BPG

SHEET: 11 OF 13

CAD FILE: 4651ASB-PH4

PROJECT NO: 4651

S:\projects\4651 Fost Tract\dwg\Asbuilt\Phase 4\4651ASB-PH4.dwg 11/16/2023 Plotted: 11/16/2023 9:03 AM HP Designjet T2500 PS HPGL2.pc3

DocuSign Envelope ID: 6E3D8B20-E45B-4FE9-AFBA-E0D9D0922DF7

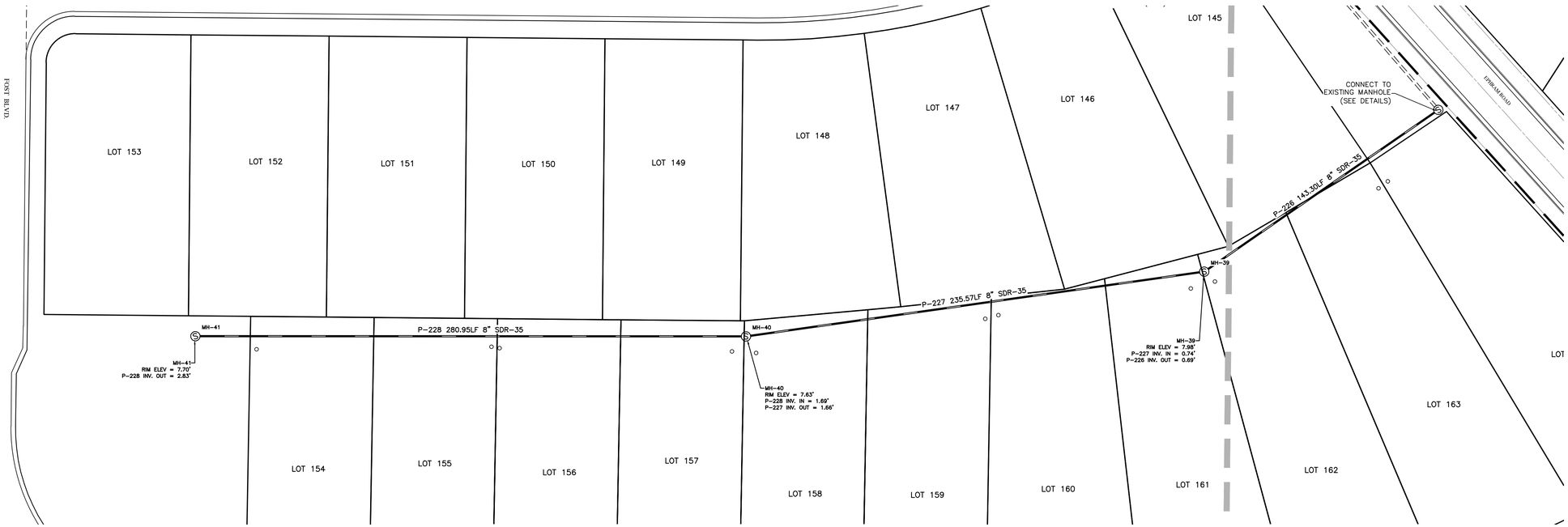

ALIGNMENT: SOUTHERN RUN (STA 0+00 - 6+71.95)

SCALE: HOR.: 1"=30' (PLAN VIEW)

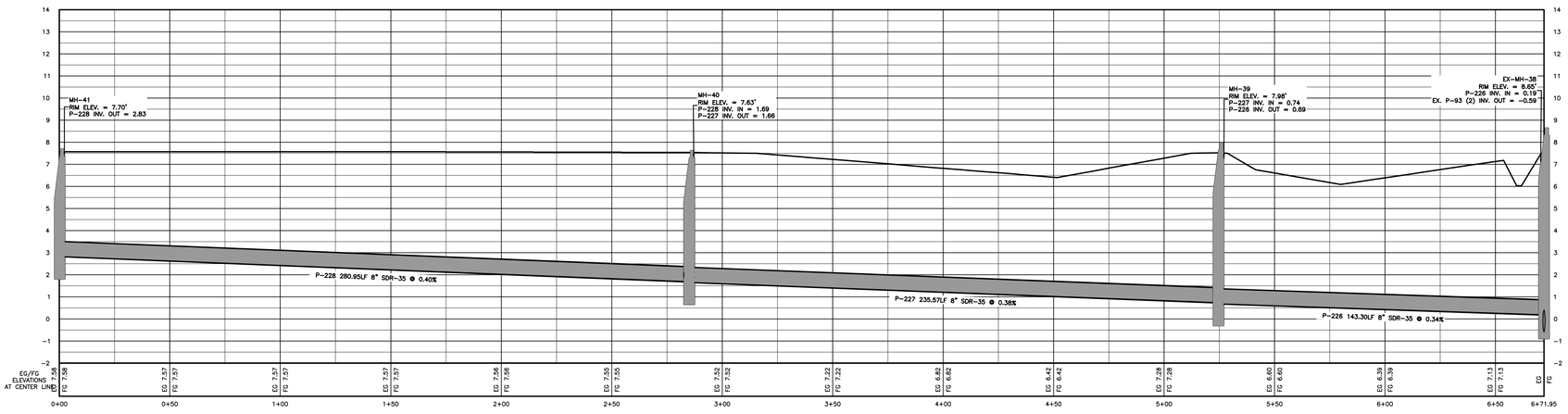

ALIGNMENT: SOUTHERN RUN (STA 0+00 - 6+71.95)

SCALE: HOR.: 1"=30' (PLAN VIEW)

Bissell Professional Group
Firm License # C-0910
3512 North Croatan Highway
P.O. Box 390
Kitty Hawk, North Carolina 27949
(252) 261-3746
FAX (252) 261-1760
BISSELL PROFESSIONAL GROUP
Engineers, Planners, Surveyors and Environmental Specialists

SEWER PROFILES

THIS DOCUMENT IS THE SOLE PROPERTY OF BPG, INC. OF KITTY HAWK, NORTH CAROLINA. THE REPRODUCTION, IN WHOLE OR PART, OR THE MODIFICATION OF ANY DETAIL OR DESIGN IS NOT TO BE MADE WITHOUT THE EXPRESS WRITTEN CONSENT OF MARK S. BISSELL, PRINCIPAL OF BPG, INC., COPYRIGHT 2005.

PROJECT:

THE FOST TRACT PD-R PHASE 4

MOYOCK TOWNSHIP CURRITUCK COUNTY NORTH CAROLINA

RECORD DRAWINGS - PHASE 4

REVISIONS

NO.	DATE	DESCRIPTION	BY

DocuSigned by:
C6DA34EC9CBF428...

DATE: 11-06-23	SCALE: 1"=40', 1"=4'
DESIGNED:	CHECKED: MSB
DRAWN: AKM	APPROVED: BPG

SHEET: 12 OF 13

CAD FILE: 4651ASB-PH4

PROJECT NO: 4651

S:\projects\4651 Fost Tract\dwg\Abbott\Phase 4\4651ASB-PH4.dwg 11/16/2023 Plotted: 11/16/2023 9:03 AM HP Designjet T2500 PS HPGL2.pc3

DocuSign Envelope ID: 6E3D8B20-E45B-4FE9-AFBA-E0D9D0922DF7

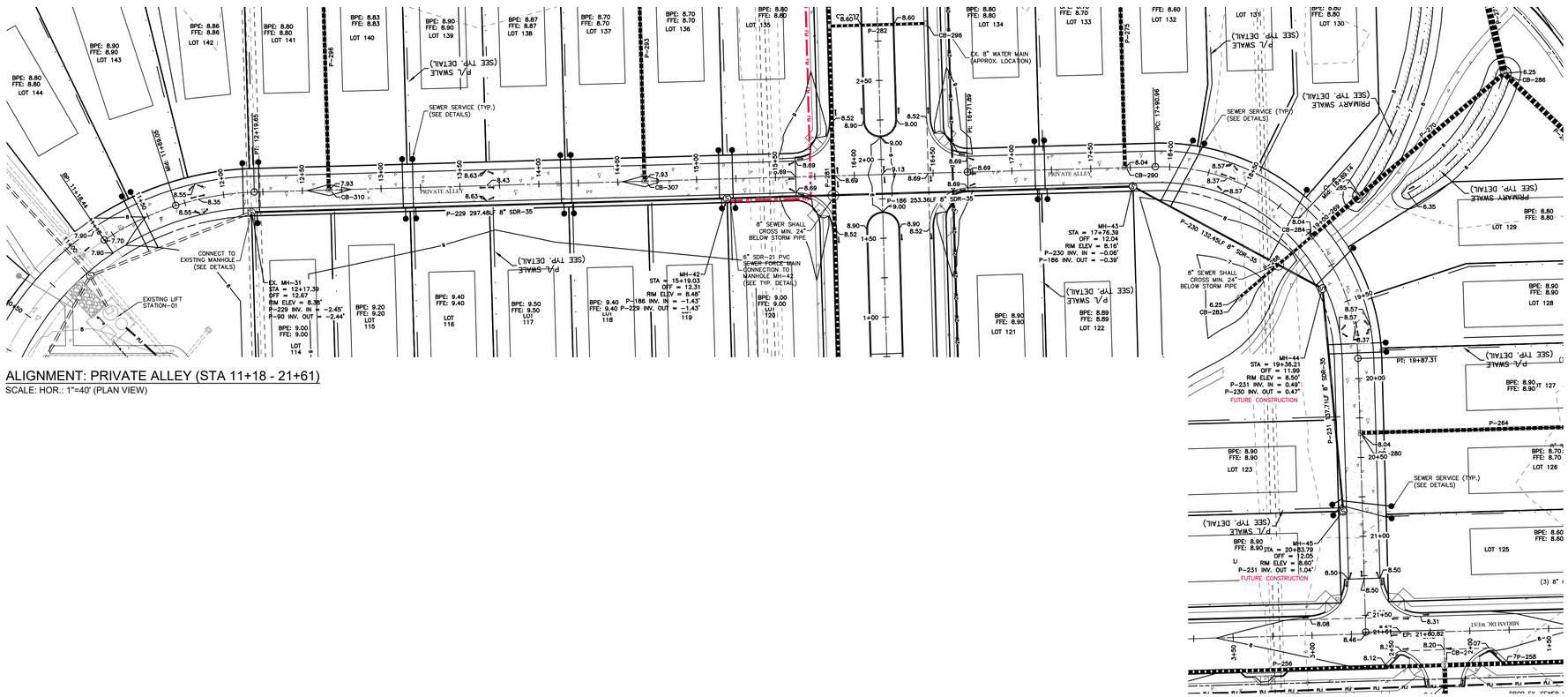

ALIGNMENT: PRIVATE ALLEY (STA 11+18 - 21+61)

SCALE: HOR.: 1"=40' (PLAN VIEW)

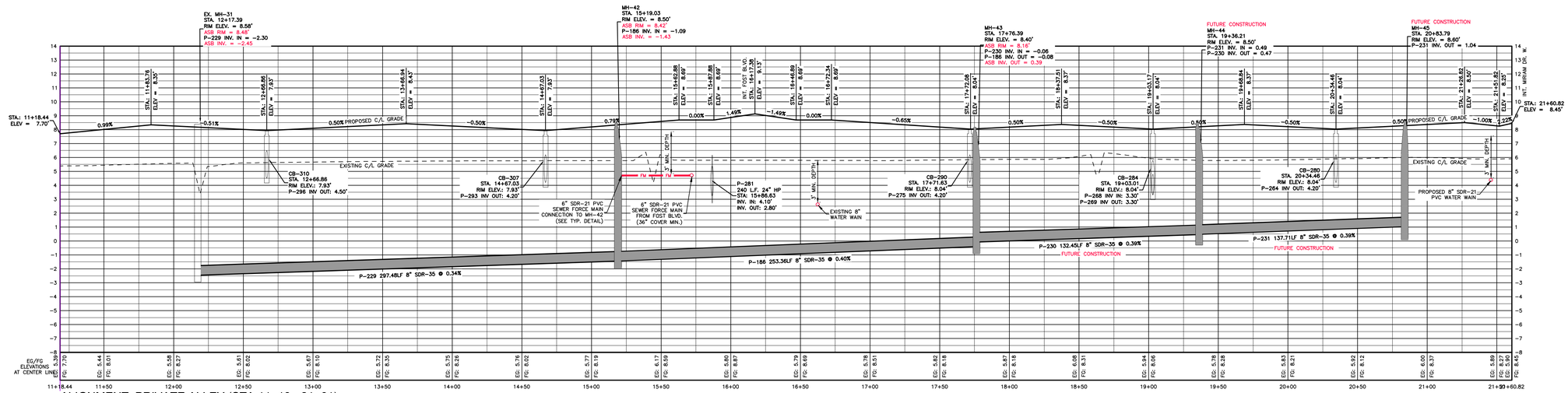

ALIGNMENT: PRIVATE ALLEY (STA 11+18 - 21+61)

SCALE: HOR.: 1"=40', VERT.: 1"=4' (PROFILE VIEW)

Bissell Professional Group
Firm License # C-0910
3512 North Croatan Highway
P.O. Box 1088, EDENTON, NC 27932
Kitty Hawk, North Carolina 27949
(252) 261-3300
FAX (252) 261-1760
BISSELL PROFESSIONAL GROUP
Engineers, Planners, Surveyors and Environmental Specialists

PRIVATE ALLEY

PLAN & PROFILE (11+18 - 21+61)

THIS DOCUMENT IS THE SOLE PROPERTY OF BPG, INC. OF KITTY HAWK, NORTH CAROLINA. THE REPRODUCTION, IN WHOLE OR PART, OR THE MODIFICATION OF ANY DETAIL OR DESIGN IS NOT TO BE MADE WITHOUT THE EXPRESS WRITTEN CONSENT OF MARK S. BISSELL, PRINCIPAL OF BPG, INC., COPYRIGHT 2005.

PROJECT:

THE FOST TRACT PD-R PHASE 4

MOYOCK TOWNSHIP CURRITUCK COUNTY NORTH CAROLINA

RECORD DRAWINGS - PHASE 4

REVISIONS

NO.	DATE	DESCRIPTION	BY
1	2-2-22	SEWER LOCATION CORRECTION	BMC

DocuSigned by:
C6DA34EC9CBF428...

DATE: 2-11-22
SCALE: 1"=40', 1"=4'
DESIGNED: BPG
CHECKED: MSB
DRAWN: AKM
APPROVED: BPG
SHEET: 13 OF 13
CAD FILE: 465100PH2
PROJECT NO: 4651

DocuSign Envelope ID: 8D8E99D2-B6B0-4A32-98F4-0EE061429EC2

THE FOST TRACT

MOYOCK TOWNSHIP CURRITUCK COUNTY NORTH CAROLINA

PHASE 4

FINAL PLAT

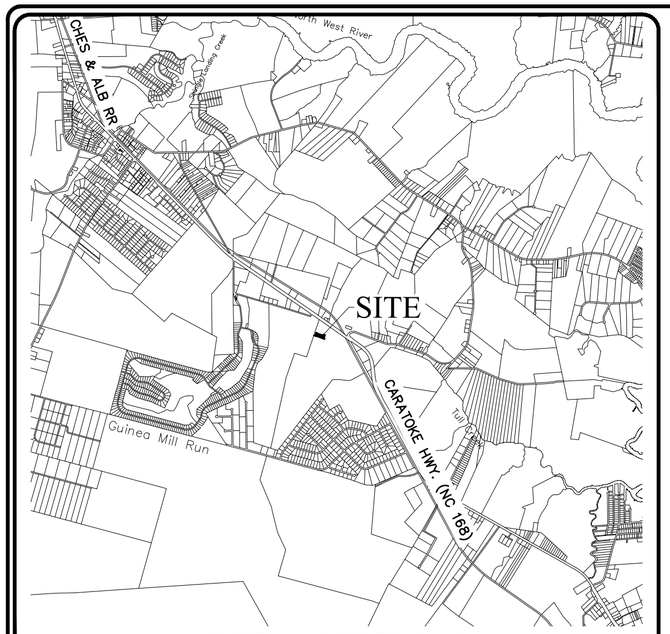

VICINITY MAP NOT TO SCALE

STORMWATER STATEMENT
NO MORE THAN THE AMOUNT SHOWN ON ATTACHMENT A TO THE RECORDED DECLARATION SHALL BE COVERED BY IMPERVIOUS STRUCTURES AND MATERIALS, INCLUDING ASPHALT, GRAVEL, CONCRETE, BRICK STONE, SLATE, OR SIMILAR MATERIAL, NOT INCLUDING WOOD DECKING OR THE WATER SURFACE OF SWIMMING POOLS. THIS COVENANT IS INTENDED TO ENSURE COMPLIANCE WITH THE STORMWATER PERMIT NUMBER SW7200202 & 7200203 ISSUED BY THE STATE OF NORTH CAROLINA. THE COVENANT MAY NOT BE CHANGED OR DELETED WITHOUT THE CONSENT OF THE STATE. FILLING IN OR PIPING OF ANY VEGETATIVE CONVEYANCES (DITCHES, SWALES, ETC.) ASSOCIATED WITH THIS DEVELOPMENT, EXCEPT FOR AVERAGE DRIVEWAY CROSSINGS, IS STRICTLY PROHIBITED BY ANY PERSON. THE LOT COVERAGE ALLOWANCE PROVIDED IN THE CURRITUCK COUNTY UNIFIED DEVELOPMENT ORDINANCE MAY BE DIFFERENT THAN THE NC STATE STORMWATER PERMIT. THE MOST RESTRICTIVE LOT COVERAGE SHALL APPLY. CURRENT COVERAGE LIMITATIONS BY LOT NUMBERS ARE: LOTS 1–16 & 38–106, 45%; LOTS 17–37 & 107–113, 60%; LOTS T1–T44, 100%; LOTS 114–120, 60%; LOTS 135–164 45%.

PUBLIC DEDICATION OF RECREATION AND PARK AREA STATEMENT
A PAYMENT IN LIEU OF RECREATION AND PARK AREA DEDICATION WILL BE PROVIDED IN ACCORDANCE WITH CURRITUCK COUNTY UNIFIED DEVELOPMENT ORDINANCE. PAYMENT IN LIEU OF RECEIVED BY THE COUNTY SHALL BE USED ONLY FOR THE ACQUISITION AND DEVELOPMENT OF RECREATION PARK AREAS, AND OPEN SPACE SITES CONSISTENT WITH THE REQUIREMENTS OF THE NORTH CAROLINA GENERAL STATUTES SECTION 153A–331.

APPROVAL CERTIFICATE
I HEREBY CERTIFY THAT THE SUBDIVISION SHOWN ON THIS PLAT IS IN ALL RESPECTS IN COMPLIANCE WITH THE CURRITUCK COUNTY UNIFIED DEVELOPMENT ORDINANCE AND, THEREFORE, THIS PLAT HAS BEEN APPROVED BY THE CURRITUCK COUNTY TECHNICAL REVIEW COMMITTEE AND SIGNED BY THE ADMINISTRATOR, SUBJECT TO ITS BEING RECORDED IN THE CURRITUCK COUNTY REGISTRY WITHIN 90 DAYS OF THE DATE BELOW.

DATE _____ ADMINISTRATOR _____.

REVIEW OFFICER CERTIFICATE
STATE OF NORTH CAROLINA
COUNTY OF CURRITUCK

I, _____,
REVIEW OFFICER OF CURRITUCK COUNTY, CERTIFY THAT THE MAP OR PLAT TO WHICH THIS CERTIFICATION IS AFFIXED MEETS ALL STATUTORY REQUIREMENTS FOR RECORDING.

DATE _____ REVIEW OFFICER _____

PUBLIC STREETS DIVISION OF HIGHWAY DISTRICT ENGINEER CERTIFICATE
I HEREBY CERTIFY THAT THE PUBLIC STREETS SHOWN ON THIS PLAT ARE INTENDED FOR DEDICATION AND HAVE BEEN DESIGNED OR COMPLETED IN ACCORDANCE WITH AT LEAST THE MINIMUM SPECIFICATIONS AND STANDARDS OF THE NC DEPARTMENT OF TRANSPORTATION FOR ACCEPTANCE OF SUBDIVISION STREETS ON THE NC HIGHWAY SYSTEM FOR MAINTENANCE.

DATE _____ DISTRICT ENGINEER _____

PRIVATE STREETS OWNER CERTIFICATE
I HEREBY CERTIFY THAT THE PRIVATE STREETS SHOWN ON THIS PLAT ARE INTENDED FOR PRIVATE USE AND WILL REMAIN UNDER THE CONTROL, MAINTENANCE AND RESPONSIBILITY OF THE DEVELOPER AND/OR A HOMEOWNER'S ASSOCIATION AND ACKNOWLEDGE THAT SOME PUBLIC SERVICES MAY NOT BE PROVIDED DUE TO THE PRIVATE NATURE OF THE ROAD.

DATE _____ OWNER _____

GENERAL NOTES:

1. PROJECT NAME: THE FOST TRACT
2. APPLICANT: MOYOCK DEVELOPMENT, LLC
   OWNERS: MOYOCK DEVELOPMENT, LLC
   417–D CARATOKE HWY.
   MOYOCK, NC 27958
3. PROPERTY DATA:
   ADDRESS: FOST BLVD., MOYOCK, NC 27958
   PARCEL ID: 0015–000–0086–0000
   RECORD DOCUMENT(S): D.B.13, PG:E/12; D.B. 1524, PG. 456
   ACREAGE: 228.83 ACRES
   PROPERTY ZONING: PD–R (PLANNED DEVELOPMENT – RESIDENTIAL)
4. F.I.R.M. DATA:
   ZONE X PER F.I.R.M. MAP NOS. 3721803100 K, 3721803000 K, & 3721804000 K ALL HAVING AN EFFECTIVE DATE DECEMBER 21, 2018. USE OF LAND WITHIN A FLOODWAY OR FLOOD PLAIN IS SUBSTANTIALLY RESTRICTED BY CHAPTER 7 OF THE CURRITUCK COUNTY UNIFIED DEVELOPMENT ORDINANCE.
5. THIS PROPERTY CONTAINS ACOE "404' JURISDICTIONAL WETLANDS AS SHOWN AND CONFIRMED BY USACOE ACTION ID# SAW 2018–00838, DATED APRIL 30, 2018, AND MAY REQUIRE U.S. CORP OF ENGINEERS APPROVAL PRIOR TO DEVELOPMENT OF THE PROPERTY.
6. A 10' EASEMENT FOR UTILITIES AND DRAINAGE ALONG REAR AND SIDE PROPERTY LINES (EXCLUDING TOWNHOME LOTS WHICH HAVE A 15' DRAINAGE & UTILITY EASEMENTS ALONG REAR PROPERTY LINES ADJACENT TO PRIVATE STREETS). EASEMENTS FOR UTILITIES AND DRAINAGE ALONG FRONT PROPERTY LINES AND PEDESTRIAN ACCESS AND STREET TREE EASEMENTS ARE HEREBY PROVIDED PER TYPICAL SECTIONS SHOWN ON SHEET 5.
7. A 25' DRAINAGE EASEMENT SHALL BE ESTABLISHED ALONG ALL MAJOR DRAINAGE WAYS SERVING MORE THAN 5 ACRES. A BLANKET DRAINAGE, UTILITY, AND PEDESTRIAN ACCESS EASEMENT IS HEREBY ESTABLISHED ACROSS ALL OPEN SPACE AREAS.
8. SECTION 7.6.5 OF THE CURRITUCK U.D.O. SUBSTANTIALLY RESTRICTS DEVELOPMENT WITHIN A 30' RIPARIAN BUFFER.
9. ALL UTILITIES ARE TO BE UNDERGROUND.
10. THIS SUBDIVISION CONTAINS RIGHTS–OF–WAY THAT ARE PLATTED WITH THE INTENT OF BEING EXTENDED AND CONTINUED TO AND FROM ADJOINING PROPERTIES. ACCESS WITHIN THE RIGHTS–OF–WAY FOR STREETS AND UTILITIES SHALL NOT BE RESTRICTED.

DEVELOPMENT NOTES:

TOTAL TRACT AREA:	228.28 AC.
TOTAL AREA PHASE 1A, 1B, 2, 3A & 3B	77.94 AC.
TOTAL AREA PHASE 4:	19.98 AC.
TOTAL AREA PHASE 1A, 1B, 2, 3A,3B &4	97.92 AC.
TOTAL AREA LOTS IN PHASE 4:	13.23 AC.
PUBLIC R/W TOTAL AREA PHASE 4:	4.37 AC.
PRIVATE R/W AREA PHASE 4;	0.33 AC
REQUIRED OPEN SPACE PHASE 1A, 1B, 2, 3A, 3B & 4 (30%):	29.37 AC.
OPEN SPACE PROVIDED PHASE 1A, 1B, 2,3A,3B: &4:	41.87 AC. (42.76%)
# OF PROPOSED LOTS PHASE 3B:	37 LOTS
PROPOSED RIGHT–OF–WAY WIDTH:	40'
PROPOSED PAVED ROADWAY WIDTH:	22'
LINEAR FEET OF ROADWAY PHASE 3A:	3773'

LOT DEVELOPMENT CONFIGURATION:

LOT AREAS: VARY FROM 6,905 S.F. TO 14,564 S.F.

SURVEY LEGEND

	RIGHT–OF–WAY
	PROPERTY BOUNDARY
	ADJOINING PROPERTY LINE
	EASEMENT LINE
	CENTERLINE OF ROADWAY
	TOP OF BANK
•	SET IRON ROD
○	EXISTING IRON ROD
O	EXISTING IRON PIPE
⊡	EXISTING CONCRETE MONUMENT
N/F	NOW OR FORMERLY
TWP.	TOWNSHIP
(T)	TOTAL
P.C.	PLAT CABINET
SL.	SLIDE
D.B.	DEED BOOK
M.B.	MAP BOOK
PG.	PAGE
SQ.FT. or S.F.	SQUARE FEET
M.B.L.	MAXIMUM BUILDING LINE
AC or AC.	ACRES
P/O	PART OF
TYP.	TYPICAL
N.T.S.	NOT TO SCALE
O.S.	OPEN SPACE
R/W	RIGHT–OF–WAY

OWNERSHIP AND DEDICATION CERTIFICATE
I HEREBY CERTIFY THAT I AM THE OWNER OF THE PROPERTY DESCRIBED HEREON, WHICH PROPERTY IS LOCATED WITHIN THE SUBDIVISION REGULATION JURISDICTION OF CURRITUCK COUNTY, THAT I HEREBY FREELY ADOPT THIS PLAT OF SUBDIVISION AND DEDICATE TO PUBLIC USE ALL AREA SHOWN ON THIS PLAT AS STREETS, UTILITIES, ALLEYS, WALKS, RECREATION AND PARKS, OPEN SPACE AND EASEMENTS, EXCEPT THOSE SPECIFICALLY INDICATED AS PRIVATE AND THAT I WILL MAINTAIN ALL SUCH AREAS UNTIL THE OFFER OF DEDICATION IS ACCEPTED BY THE APPROPRIATE PUBLIC AUTHORITY OR HOME OWNERS' ASSOCIATION. ALL PROPERTY SHOWN ON THIS PLAT AS DEDICATED FOR A PUBLIC USE SHALL BE DEEMED TO BE DEDICATED FOR ANY OTHER PUBLIC USE AUTHORIZED BY LAW WHEN SUCH USE IS APPROVED BY THE APPROPRIATE PUBLIC AUTHORITY IN THE PUBLIC INTEREST.

DATE _____ OWNER _____

I, _____, A NOTARY PUBLIC

OF _____ COUNTY, NORTH CAROLINA, DO HEREBY CERTIFY THAT

_____ PERSONALLY APPEARED BEFORE ME THIS DATE AND ACKNOWLEDGED THE DUE EXECUTION OF THE FOREGOING CERTIFICATE.

WITNESS MY HAND AND OFFICIAL SEAL THIS _____ DAY OF _____,
20_____

_____
NOTARY PUBLIC

MY COMMISSION EXPIRES _____

REQUIRED IMPROVEMENTS CERTIFICATE
I HEREBY CERTIFY THAT ALL OF THE IMPROVEMENTS REQUIRED BY THE CURRITUCK COUNTY UNIFIED DEVELOPMENT ORDINANCE HAVE BEEN INSTALLED IN ACCORDANCE WITH THE PLANS AND SPECIFICATIONS PREPARED BY BISSELL PROFESSIONAL GROUP, AND THAT SAID IMPROVEMENTS COMPLY WITH CURRITUCK COUNTY SPECIFICATIONS, EXCEPT THAT A PERFORMANCE GUARANTEE HAS BEEN POSTED WITH CURRITUCK COUNTY GUARANTEEING THAT ALL REMAINING IMPROVEMENTS MUST BE COMPLETED BY THE 21ST OF AUGUST, 2025 ACCORDING TO THE PLANS AND SPECIFICATIONS PREPARED BY BISSELL PROFESSIONAL GROUP. REMAINING IMPROVEMENTS INCLUDE:

- SIDEWALKS & MULTI–USE PATH
- STREET TREES
- FARM BUFFER
- FLORA PORTION OF ROWLAND CREEK IMPROVEMENTS
- PERMANENT STREET SIGNS AND NO PARKING SIGNS
- PAVEMENT MARKINGS

11/16/23
DATE

DocuSigned by:
C6DA34EC9CBF428...
REGISTERED LAND SURVEYOR/ENGINEER

L–1756
REGISTRATION NUMBER

SURVEYOR'S CERTIFICATION
I, MICHAEL D. BARR, CERTIFY THAT THIS PLAT WAS DRAWN UNDER MY SUPERVISION FROM AN ACTUAL SURVEY MADE UNDER MY SUPERVISION (DEED AND DESCRIPTION RECORDED IN BOOKS REFERENCED); THAT THE BOUNDARIES NOT SURVEYED ARE CLEARLY INDICATED AS DRAWN FROM INFORMATION FOUND IN BOOKS REFERENCED; THAT THE RATIO OF PRECISION AS CALCULATED IS 1:10,000; THAT THIS PLAT WAS PREPARED IN ACCORDANCE WITH G.S. 47–30 AS AMENDED.

THIS IS TO CERTIFY THAT THIS SURVEY CREATES A SUBDIVISION OF LAND WITHIN THE AREA OF A COUNTY OR MUNICIPALITY THAT HAS AN ORDINANCE THAT REGULATES PARCELS OF LAND.

WITNESS MY ORIGINAL SIGNATURE, REGISTRATION NUMBER AND SEAL THIS 16th DAY OF NOVEMBER A.D., 2023.

DocuSigned by:
C6DA34EC9CBF428...
SIGNATURE L–1756

Sheet Number	Sheet Title
1	COVER
2	OVERALL
3	LOT LAYOUT
4	LOT LAYOUT
5	DETAILS

Bissell Professional Group
Firm License # C–0558
3512 North Croatan Highway
P.O. Box 1068
Kitty Hawk, North Carolina 27949
(252) 261–3266
FAX (252) 261–1760
BISSELL PROFESSIONAL GROUP
Engineers, Planners, Surveyors and Environmental Specialists
This document is the sole property of BPG, Inc. of Kitty Hawk, North Carolina. The reproduction, in whole or part, or the modification of any document thereof may not be made without the express written consent of Mark S. Bissell, Principal of BPG, Inc. Copyright 2005.

PROJECT: THE FOST TRACT PD-R
PHASE 4
MOYOCK TWSP. CURRITUCK COUNTY NORTH CAROLINA
FINAL SUBDIVISION PLAT

REVISIONS

NO.	DATE	DESCRIPTION	BY

NORTH CAROLINA PROFESSIONAL SEAL L-1756 LAND SURVEYOR MICHAEL D. BARR

DATE: 11-09-2023	SCALE: AS SHOWN
DESIGNED:	CHECKED: MSB
DRAWN: AKM	APPROVED: MSB

SHEET: 1 OF 5
CAD FILE: 465100FP-PH4
PROJECT NO: 4651

S:\projects\4651 Fost Tract\dwg\Final Plats\Phase 4\465100FP-PH4.dwg 11/16/2023 Plotted: 11/16/2023 9:02 AM HP DesignJet T130 24-in Printer [40FE861].pc3

DocuSign Envelope ID: 8D8E99D2-B6B0-4A32-98F4-0EE061429EC2

CURVE TABLE					
CURVE	LENGTH	RADIUS	CHORD	BEARING	DELTA
C-P8	11.52'	50.00'	11.50'	S28° 05' 45"W	13°12'15"
C1	118.97'	120.28'	114.18'	S47° 37' 33"W	56°40'33"
C2	171.08'	120.28'	157.02'	S21° 27' 43"E	81°29'55"
C3	74.45'	120.28'	73.27'	S89° 07' 04"E	35°28'00"
C4	112.81'	180.00'	110.97'	S89° 20' 19"E	35°54'31"
C5	249.46'	363.00'	244.58'	N88° 55' 42"E	39°22'29"
C6	320.23'	500.00'	314.78'	S89° 12' 57"E	36°41'44"
C7	112.36'	150.30'	109.76'	S54° 32' 41"W	42°49'56"
C9	19.76'	15.00'	18.36'	N70° 52' 15"E	75°29'24"
C10	20.03'	15.00'	18.57'	N33° 08' 08"W	76°29'51"
C11	130.70'	150.28'	126.62'	S19° 48' 06"E	49°50'00"
C13	16.58'	15.00'	15.75'	N13° 03' 05"W	63°20'02"
C14	23.56'	15.00'	21.21'	N63° 36' 57"E	90°00'00"
C15	23.56'	15.00'	21.21'	N26° 23' 03"W	90°00'00"
C16	23.56'	15.00'	21.21'	N63° 36' 57"E	90°00'00"
C17	23.56'	15.00'	21.21'	N26° 23' 03"W	90°00'00"
C18	85.69'	108.00'	83.46'	N41° 20' 43"E	45°27'32"
C19	84.24'	103.00'	81.92'	S40° 38' 35"W	46°51'46"
C20	58.36'	108.00'	57.65'	N32° 41' 34"E	30°57'43"
C21	58.36'	108.00'	57.65'	N72° 57' 45"W	30°57'43"
C22	118.72'	103.00'	112.26'	N89° 29' 55"E	66°02'24"
C23	99.25'	108.00'	95.79'	S82° 48' 19"W	52°39'12"

CURVE TABLE					
CURVE	LENGTH	RADIUS	CHORD	BEARING	DELTA
C24	333.04'	520.00'	327.38'	S89° 12' 57"E	36°41'44"
C25	22.12'	15.00'	20.17'	N66° 09' 27"W	84°28'50"
C26	65.97'	180.00'	65.61'	N13° 25' 02"W	21°00'02"
C27	51.47'	90.28'	50.77'	N87° 42' 16"W	32°39'49"
C28	232.16'	90.28'	173.27'	S2° 17' 23"W	147°20'52"
C29	55.88'	90.28'	54.99'	S89° 07' 04"E	35°28'00"
C30	34.92'	150.28'	34.84'	N79° 48' 21"E	13°18'51"
C31	35.24'	150.28'	35.16'	S86° 49' 10"E	13°26'08"
C32	22.86'	150.28'	22.84'	S75° 44' 34"E	8°43'02"
C33	23.56'	15.00'	21.21'	S63° 36' 57"W	90°00'00"
C34	23.56'	15.00'	21.21'	S26° 23' 01"E	89°59'55"
C35	2.04'	165.00'	2.04'	S71° 44' 18"E	0°42'28"
C36	103.43'	165.81'	101.76'	S89° 17' 50"E	35°44'20"
C37	40.00'	195.00'	39.93'	N78° 37' 00"E	11°45'14"
C38	40.00'	195.00'	39.93'	S89° 37' 49"E	11°45'09"
C39	39.39'	195.00'	39.33'	S77° 57' 59"E	11°34'30"
C40	2.70'	195.00'	2.70'	S71° 46' 54"E	0°47'41"
C41	23.56'	15.00'	21.21'	S63° 36' 49"W	89°59'45"
C42	23.56'	15.00'	21.21'	S26° 23' 03"E	90°00'00"
C43	63.99'	338.00'	63.90'	S76° 48' 29"E	10°50'52"
C44	70.62'	338.00'	70.49'	S88° 13' 03"E	11°58'15"
C45	70.95'	338.00'	70.82'	N79° 47' 01"E	12°01'37"

CURVE TABLE					
CURVE	LENGTH	RADIUS	CHORD	BEARING	DELTA
C46	25.34'	338.00'	25.33'	N71° 37' 21"E	4°17'43"
C47	22.26'	15.00'	20.27'	N66° 25' 34"W	85°01'04"
C48	13.40'	388.00'	13.40'	N72° 03' 16"E	1°58'45"
C49	61.72'	388.00'	61.65'	N77° 36' 04"E	9°06'50"
C50	61.86'	388.00'	61.80'	N86° 43' 32"E	9°08'07"
C51	61.86'	388.00'	61.80'	S84° 08' 21"E	9°08'07"
C52	55.44'	388.00'	55.40'	S75° 28' 41"E	8°11'15"
C53	23.56'	15.00'	21.21'	S63° 36' 57"W	90°00'00"
C54	85.69'	108.00'	83.46'	S4° 06' 49"E	45°27'32"
C55	15.51'	103.00'	15.50'	N22° 31' 44"W	8°37'42"
C56	77.00'	108.00'	75.38'	S38° 38' 23"E	40°51'00"
C57	22.25'	108.00'	22.21'	S64° 57' 59"E	11°48'12"
C58	76.10'	480.00'	76.02'	S75° 24' 37"E	9°05'03"
C59	77.33'	480.00'	77.24'	S84° 34' 03"E	9°13'49"
C60	79.72'	480.00'	79.63'	N86° 03' 33"E	9°30'59"
C61	74.26'	480.00'	74.19'	N76° 52' 07"E	8°51'53"
C62	25.23'	15.00'	22.36'	N24° 15' 34"E	96°21'13"
C63	19.26'	120.28'	19.24'	S66° 47' 52"E	9°10'23"
C64	7.57'	520.00'	7.57'	N72° 01' 09"E	0°50'03"

DEVELOPMENT STANDARDS & SETBACKS			
STYLE			
	TND T.H.	TND S.F. LOT	CONV. S.F. LOT
MIN. LOT SIZE	1,800 SF	6,900 SF	9,500 SF
TYPICAL LOT SIZE	1,800 – 3,000 SF	7,000 – 9,000 SF	10,000 – 15,000 SF
MIN. LOT WIDTH	20'	35'	35'
TYPICAL LOT WIDTH	20'–25'	50'–60'	62'
FRONT SETBACK	15'	20'	20'
SIDE SETBACK	0	10'	10'
REAR SETBACK	20'	20'	25'
CORNER SIDE SETBACK	15'	15'	15'
MAXIMUM SETBACK	25'	75'	140'
MAXIMUM HEIGHT	35'	35'	35'
MAXIMUM BUILDING SIZE	16,000 SF	N/A	N/A
MAXIMUM LOT COVERAGE	100%	60%	45%

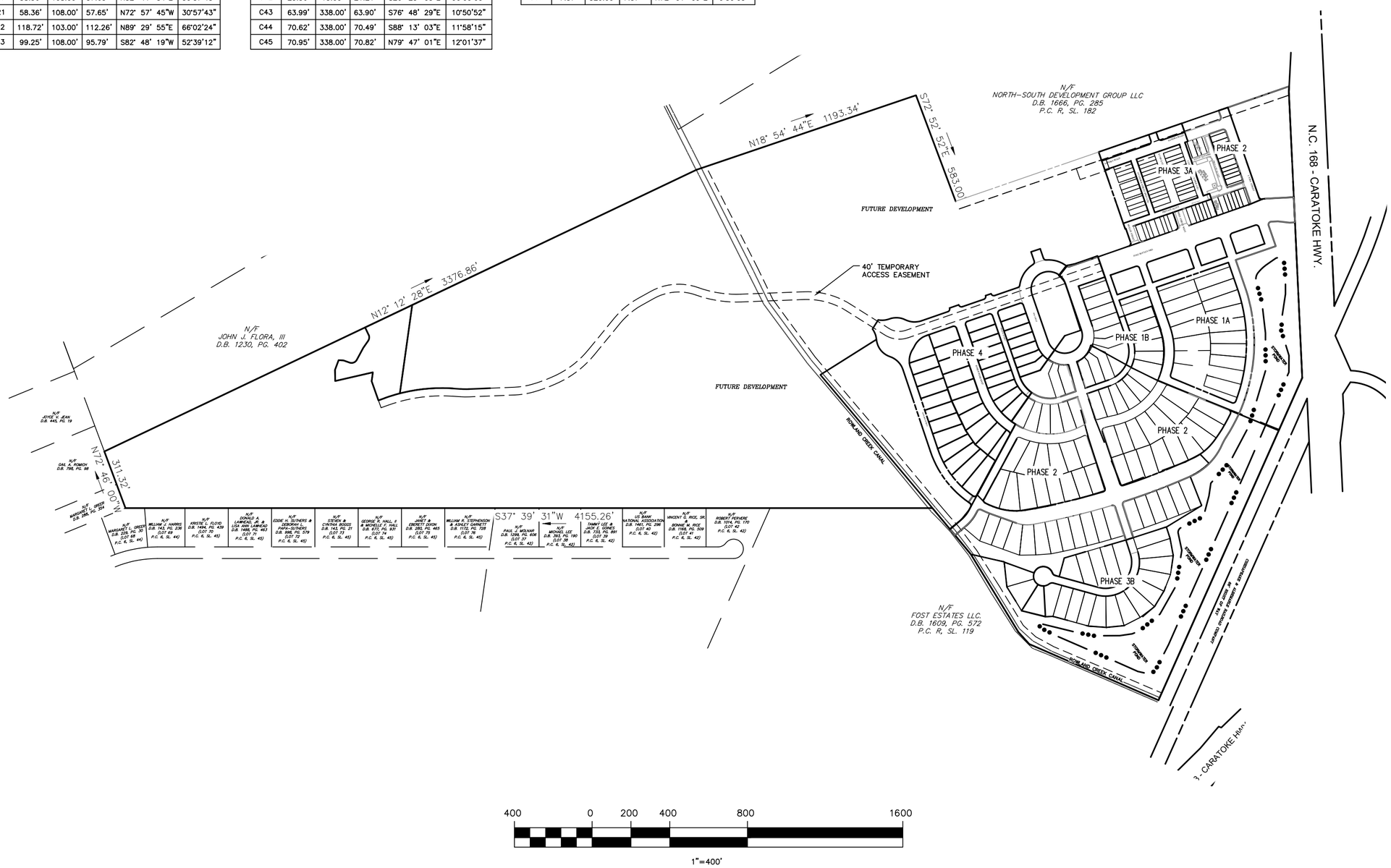

400 0 200 400 800 1600

1"=400'

GRAPHIC SCALE

Bissell Professional Group
Firm License # C-0910
3512 North Croatan Highway
P.O. Box 1068
Kitty Hawk, North Carolina 27949
(252) 261-3266
FAX (252) 261-1760
BISSELL PROFESSIONAL GROUP
Engineers, Planners, Surveyors and Environmental Specialists

This document is the sole property of BPG, Inc. of Kitty Hawk, North Carolina. The reproduction, in whole or part, or the modification of any document by any other person or firm without the express written consent of Mark S. Bissell, Principal of BPG, Inc., Copyright 2005.

PROJECT:

THE FOST TRACT PD-R
PHASE 4

MOYOCK TWSP. CURRITUCK COUNTY NORTH CAROLINA

FINAL SUBDIVISION PLAT

REVISIONS

NO.	DATE	DESCRIPTION	BY

NORTH CAROLINA PROFESSIONAL SEAL L-1756 MICHAEL K. MOORE SURVEYOR

DocuSigned by:
C6DA34EC9CBF428...
11/16/23

DATE: 11-09-2023	SCALE: AS SHOWN
DESIGNED:	CHECKED: MSB
DRAWN: AKM	APPROVED: MSB

SHEET: 2 OF 5

CAD FILE: 465100FP-PH4

PROJECT NO: 4651

S:\projects\4651 Fost Tract\dwg\Final Plats\Phase 4\465100FP-PH4.dwg 11/16/2023 Plotted: 11/16/2023 9:02 AM HP DesignJet T130 24-in Printer [40FE86].pc3

DocuSign Envelope ID: 8D8E99D2-B6B0-4A32-98F4-0EE061429EC2

SURVEY LEGEND	
	RIGHT-OF-WAY
	PROPERTY BOUNDARY
	ADJOINING PROPERTY LINE
	EASEMENT LINE
	CENTERLINE OF ROADWAY
	TOP OF BANK
•	SET IRON ROD
○	EXISTING IRON ROD
◉	EXISTING IRON PIPE
⊡	EXISTING CONCRETE MONUMENT
N/F	NOW OR FORMERLY
TWP.	TOWNSHIP
P.C.	PLAT CABINET
SL.	SLIDE
D.B.	DEED BOOK
M.B.	MAP BOOK
PG.	PAGE
SQ.FT. or S.F.	SQUARE FEET
M.B.L.	MAXIMUM BUILDING LINE
AC or AC.	ACRES
P/O	PART OF
TYP.	TYPICAL
N.T.S.	NOT TO SCALE
O.S.	OPEN SPACE
R/W	RIGHT-OF-WAY
	SITE TRIANGLES (TYP.)

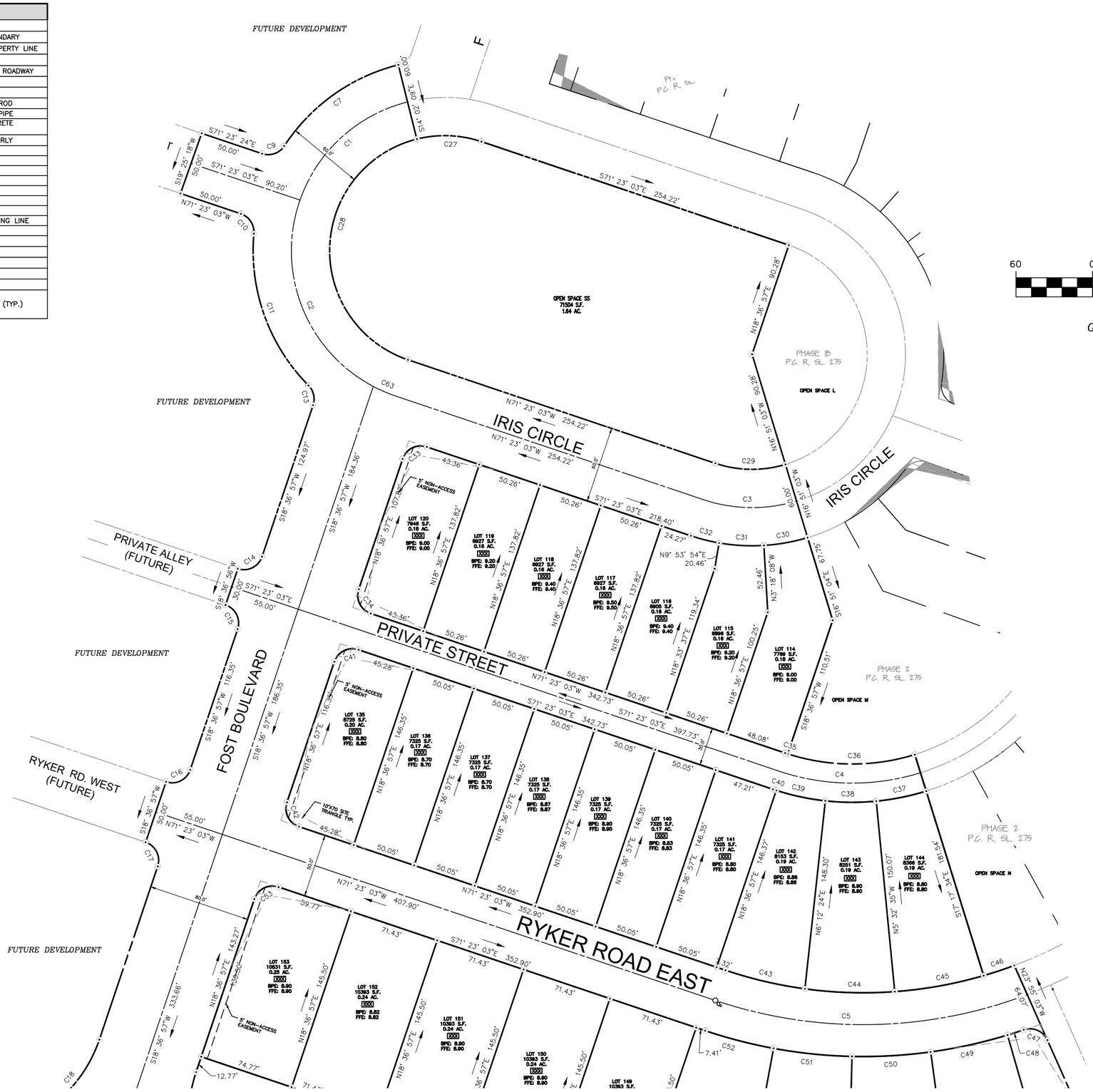

NORTH

NC NAD 83(2011) GRID NORTH

60 0 30 60 120

1" = 60'

GRAPHIC SCALE

Bissell Professional Group
Firm License # C-0168
3512 North Croatan Highway
P.O. Box 1068
Kitty Hawk, North Carolina 27949
(252) 261-3266
FAX (252) 261-1760
BISSELL PROFESSIONAL GROUP
Engineers, Planners, Surveyors and Environmental Specialists

This document is the sole property of BPG, Inc. of Kitty Hawk, North Carolina. The reproduction, in whole or part, or variation thereof, is not permitted without prior written consent of BPG, Inc. Copyright 2005.

PROJECT:

THE FOST TRACT PD-R
PHASE 4

MOYOCK TWSP. CURRITUCK COUNTY NORTH CAROLINA

FINAL SUBDIVISION PLAT

REVISIONS

NO.	DATE	DESCRIPTION	BY

NORTH CAROLINA PROFESSIONAL SEAL L-4651 MICHAEL S. BISSELL

DocuSigned by:
C6DA34EC9CBF428...
11/16/2023

DATE: 11-09-2023	SCALE: AS SHOWN
DESIGNED:	CHECKED: MSB
DRAWN: AKM	APPROVED: MSB

SHEET: 3 OF 5

CAD FILE: 465100FP-PH4

PROJECT NO: 4651

S:\projects\4651 Fost Tract\dwg\Final Plats\Phase 4\465100FP-PH4.dwg 11/16/2023 Plotted: 11/16/2023 9:03 AM HP DesignJet T130 24-in Printer (40FE86)pc3

DocuSign Envelope ID: 8D8E99D2-B6B0-4A32-98F4-0EE061429EC2

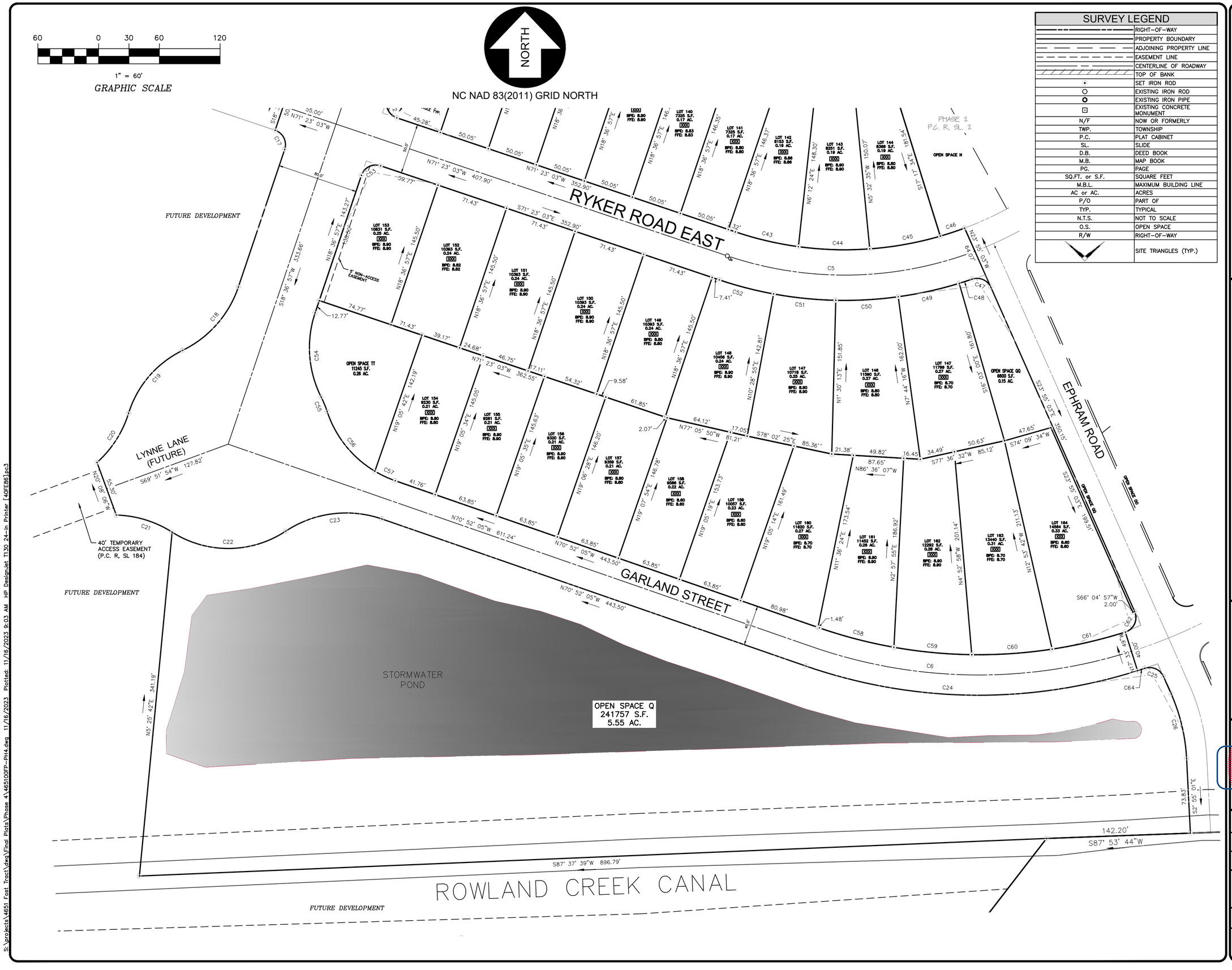

Bissell Professional Group
Firm License # C-0466
3512 North Croatan Highway
P.O. Box 1068
Kitty Hawk, North Carolina 27949
(252) 261-3266
FAX (252) 261-1760
BISSELL PROFESSIONAL GROUP
Engineers, Planners, Surveyors and Environmental Specialists

This document is the sole property of BPG, Inc. of Kitty Hawk, North Carolina. The reproduction, in whole or part, or any modification of this document, is prohibited without the express written consent of Mark S. Bissell, Principal of BPG, Inc., Copyright 2005.

PROJECT:

THE FOST TRACT PD-R
PHASE 4

MOYOCK TWSP. CURRITUCK COUNTY NORTH CAROLINA

FINAL SUBDIVISION PLAT

REVISIONS

NO.	DATE	DESCRIPTION	BY

NORTH CAROLINA PROFESSIONAL SEAL LAND SURVEYOR MICHAEL S. BISSELL

DocuSigned by:
C6DA34EC9CBF428...
11-16-23

DATE: 11-09-2023	SCALE: AS SHOWN
DESIGNED:	CHECKED: MSB
DRAWN: AKM	APPROVED: MSB

SHEET: 4 OF 5

CAD FILE: 465100FP-PH4

PROJECT NO: 4651

S:\projects\4651 Fost Tract\dwg\Final Plats\Phase 4\465100FP-PH4.dwg 11/16/2023 Plotted: 11/16/2023 9:03 AM HP DesignJet T130 24-in Printer [40FE86].pc3

DocuSign Envelope ID: 8D8E99D2-B6B0-4A32-98F4-0EE061429EC2

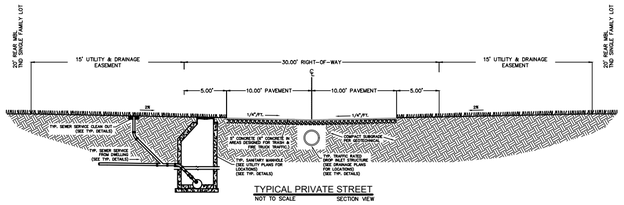

TYPICAL PRIVATE STREET
NOT TO SCALE — SECTION VIEW

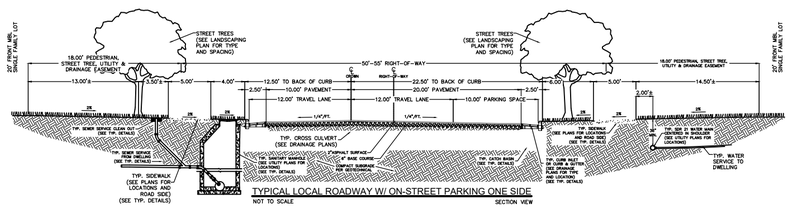

TYPICAL LOCAL ROADWAY W/ ON-STREET PARKING ONE SIDE
NOT TO SCALE — SECTION VIEW

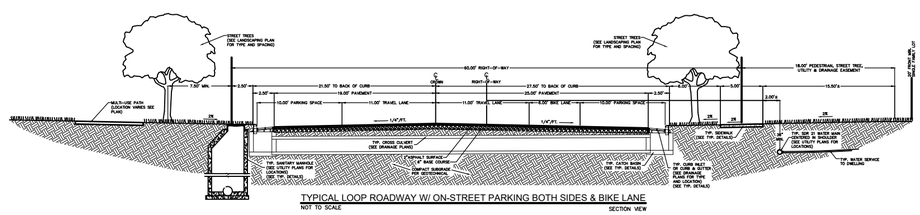

TYPICAL LOOP ROADWAY W/ ON-STREET PARKING BOTH SIDES & BIKE LANE
NOT TO SCALE — SECTION VIEW

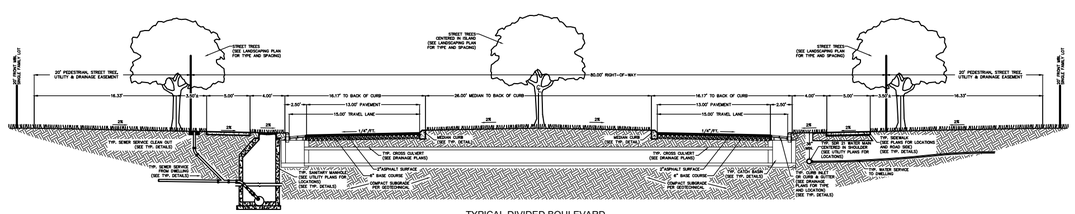

TYPICAL DIVIDED BOULEVARD
NOT TO SCALE — SECTION VIEW

Bissell Professional Group
Firm License # C-0265
3512 North Croatan Highway
P.O. Box 1068
Kitty Hawk, North Carolina 27949
(252) 261-3266
FAX (252) 261-1760
BISSELL PROFESSIONAL GROUP
Engineers, Planners, Surveyors and Environmental Specialists

This document is the sole property of BPG, Inc. of Kitty Hawk, North Carolina. The reproduction, in whole or part, or the modification of any document or design is prohibited without the express written consent of Mark S. Bissell, Principal of BPG, Inc. Copyright 2005.

PROJECT:

THE FOST TRACT PD-R
PHASE 4

MOYOCK TWSP. — CURRITUCK COUNTY — NORTH CAROLINA

FINAL SUBDIVISION PLAT

REVISIONS

NO.	DATE	DESCRIPTION	BY

NORTH CAROLINA PROFESSIONAL SEAL L-1750 SURVEYOR MICHAEL D. BRAY

DocuSigned by:
C6DA34EC9CBF428...
11-16-23

DATE: 11-09-2023	SCALE: AS SHOWN
DESIGNED:	CHECKED: MSB
DRAWN: AKM	APPROVED: MSB

SHEET: 5 OF 5

CAD FILE: 465100FP-PH4

PROJECT NO: 4651

S:\projects\4651 Fost Tract\dwg\Final Plats\Phase 4\465100FP-PH4.dwg 11/16/2023 Plotted: 11/16/2023 9:03 AM HP DesignJet T130 24-in Printer [40FE861].pc3