COINJOCK MEADOWS
PHASE II

PRELIMINARY SUBDIVISION PLAT
CRAWFORD TOWNSHIP, CURRITUCK COUNTY
NORTH CAROLINA

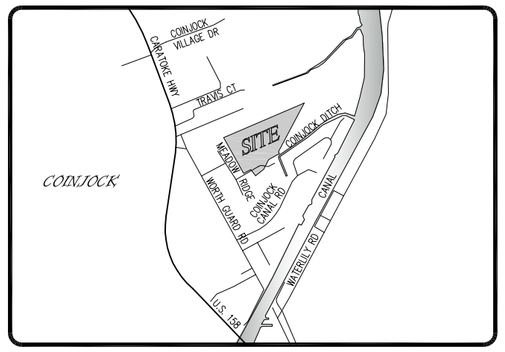

VICINITY MAP
N.T.S.

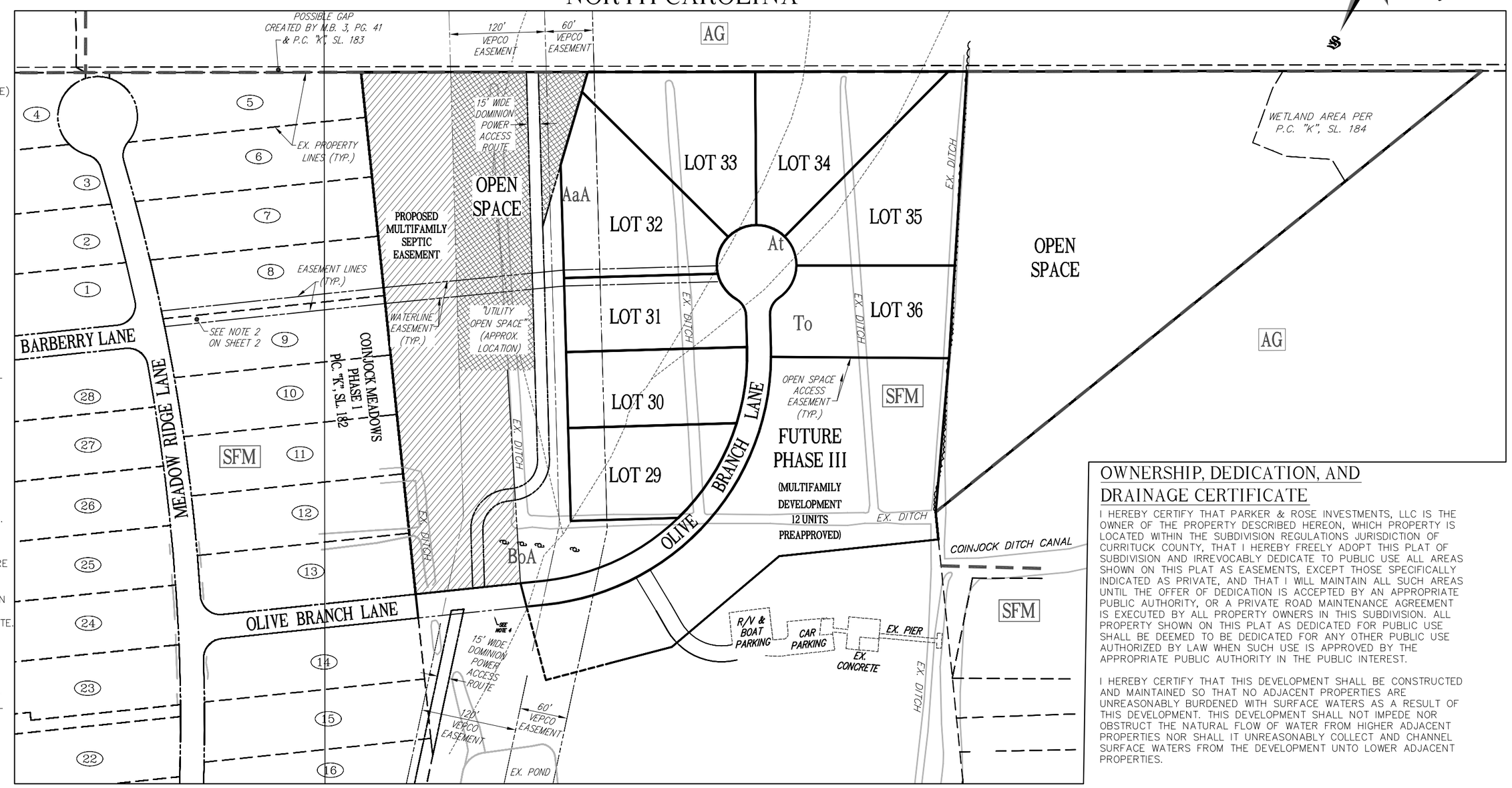

REFERENCES

- P.C. "K", SL. 182 (COINJOCK MEADOWS, P.R.D., PHASE I)
- M.B. 2, PG. 20 (COINJOCK DEVELOPMENT CO. SECTION "C")
- M.B. 3, PG. 41 (DIVISION OF PROPERTY OF JOHN MIDGETT ESTATE)
- D.B. 1643, PG. 452 (PARKER & ROSE INVESTMENTS, LLC)
- D.B. 1389, PG. 71 (PATRICIA POOLE ADKINS)

NOTES

1. PROPERTY ADDRESS: OLIVE BRANCH LANE
2. PARCEL: 0070000013D0000, PIN: 8996-70-1586
3. CURRITUCK COUNTY ZONING: SFM (SINGLE-FAMILY RESIDENTIAL MAINLAND)
4. AREA TABULATION;
   LOT 29: 21,039 sq. ft. or 0.483 acres
   LOT 30: 21,180 sq. ft. or 0.486 acres
   LOT 31: 20,198 sq. ft. or 0.464 acres
   LOT 32: 29,850 sq. ft. or 0.685 acres
   LOT 33: 28,033 sq. ft. or 0.644 acres
   LOT 34: 28,431 sq. ft. or 0.653 acres
   LOT 35: 32,141 sq. ft. or 0.738 acres
   LOT 36: 25,207 sq. ft. or 0.579 acres
   OLIVE BRANCH LANE: 23,859 sq. ft. or 0.548 acres
   FUTURE PHASE III: 77,338.69 sq. ft. or 1.775 acres
   OPEN SPACE AREA: 337,163 sq. ft. or 7.740 acres
   TOTAL AREA OF SUBDIVISION: 644,440 sq. ft. or 14.794 acres
5. AREAS CALCULATED BY COORDINATE METHOD.
6. BOUNDARY AS RECORDED IN P.C. "K", SL. 182 OF THE CURRITUCK COUNTY REGISTRY.
7. THIS SURVEY WAS PERFORMED WITHOUT THE BENEFIT OF A TITLE COMMITMENT.
8. THESE PARCELS MAY BE SUBJECT TO EASEMENTS NOT SHOWN HEREON.
9. LOTS MAY BE IN AN AREA OF ENVIRONMENTAL CONCERN. INDIVIDUAL PERMITS MAY BE REQUIRED.
10. PROPERTY IS LOCATED IN F.I.R.M. ZONES AS SHOWN, MAP NOS. 3720898600K AND 3720898400L, DATED DECEMBER 21, 2018. USE OF LAND WITHIN THE FLOODWAY OR FLOODPLAIN AND FLOOD ZONES SUBJECT TO CHANGE BY FEMA.
11. A BLANKET DRAINAGE, UTILITY, AND PEDESTRIAN ACCESS EASEMENT IS HEREBY ESTABLISHED ACROSS ALL OPEN SPACE AREAS.
12. UNLESS OTHERWISE NOTED, ALL DISTANCES SHOWN HEREON ARE HORIZONTAL GROUND MEASURED IN US-FEET.
13. THIS CLASS "A" SURVEY WAS PERFORMED USING A REAL TIME GLOBAL NAVIGATION SATELLITE SYSTEM (GNSS) IN CONJUNCTION WITH A ROBOTIC TOTAL STATION.
14. THERE ARE NO GEODETIC MONUMENTS WITHIN 2000' OF THE SITE.

EASEMENT ESTABLISHMENT STATEMENT

A 10 FOOT EASEMENT FOR UTILITIES AND DRAINAGE ALONG SIDE PROPERTY LINES AND A 20 FOOT EASEMENT ALONG THE FRONT AND REAR PROPERTY LINES ARE HEREBY ESTABLISHED.

WETLANDS STATEMENT

AREAS OF THE PROPERTY SHOWN ON THIS PLAT MAY CONTAIN 404 WETLANDS AND MAY REQUIRE U.S. CORPS OF ENGINEERS APPROVAL PRIOR TO DEVELOPMENT OF THE PROPERTY.

PROPERTY ADJACENT TO ACTIVE FARMLAND STATEMENT

AS OF THE RECORDED DATE OF THIS PLAT, SOME PORTIONS OF THIS DEVELOPMENT ADJOIN LAND USED FOR ACTIVE AGRICULTURE PURPOSES WHICH MAY INCLUDE, BUT NOT BE LIMITED TO ACTIVITIES SUCH AS DUST GENERATION, SPRAYING OF CHEMICALS, ETC., THEREFORE, FURTHER INVESTIGATION MAY BE DESIRED BY PROSPECTIVE PURCHASERS.

EVALUATED FOR SEPTIC SUITABILITY

ALL LOTS SHOWN HEREON HAVE BEEN EVALUATED THROUGH PERC TESTS BY THE ALBEMARLE REGIONAL HEALTH SERVICES, AND EACH LOT HAS BEEN DETERMINED SUITABLE TO SUPPORT AN ONSITE SEPTIC SYSTEM. INDIVIDUAL LOT EVALUATIONS HAVE BEEN COMPLETED.

REVIEW OFFICERS CERTIFICATE

STATE OF NORTH CAROLINA
COUNTY OF CURRITUCK

I,_____, REVIEW OFFICER OF CURRITUCK COUNTY, CERTIFY THAT THE PLAT TO WHICH THIS CERTIFICATION IS AFFIXED MEETS ALL STATUTORY REQUIREMENTS FOR RECORDING.

REVIEW OFFICER _____ DATE _____

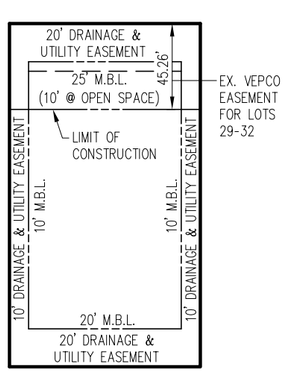

OLIVE BRANCH LANE

TYPICAL LOT EASEMENT & SETBACK LAYOUT
NOT TO SCALE

SOIL TYPES

AaA = ALTAVISTA FINE SANDY LOAM, 0 TO 2 PERCENT SLOPES
At = AUGUSTA FINE SANDY LOAM
BoA = BOJAC LOAMY SAND, 0 TO 3 PERCENT SLOPES
To = TOMOTLEY FINE SANDY LOAM

OVERALL PLAN
SCALE: 1" = 120'

120 60 0 60
1 inch = 120 ft.
GRAPHIC SCALE

ZONING LEGEND

AG - AGRICULTURAL
GB - GENERAL BUSINESS
SFM - SINGLE-FAMILY RESIDENTIAL MAINLAND

CERTIFICATE OF SURVEY & ACCURACY

I, CARLOS F. GOMEZ, CERTIFY THAT THIS MAP WAS DRAWN UNDER MY SUPERVISION FROM AN ACTUAL SURVEY MADE UNDER MY SUPERVISION, DEED DESCRIPTION RECORDED IN P.C. "K", SL. 182, AND D.B. 1643, PG. 452 OF THE CURRITUCK COUNTY REGISTRY; THAT THE ERROR OF CLOSURE AS CALCULATED IS 1:10,000+, THAT THE BOUNDARIES NOT ACTUALLY SURVEYED ARE SHOWN AS BROKEN LINES PLOTTED FROM INFORMATION FOUND IN THE RECORDED INSTRUMENTS LISTED HEREON AND THAT THIS MAP WAS PREPARED IN ACCORDANCE WITH G.S. 47-30 AS AMENDED.

THIS INSTRUMENT ALSO CERTIFIES THAT THIS SURVEY CREATES A SUBDIVISION OF LAND WITHIN THE AREA OF A COUNTY OR MUNICIPALITY THAT HAS AN ORDINANCE THAT REGULATES PARCELS OF LAND.

WITNESS MY ORIGINAL SIGNATURE, REGISTRATION NUMBER, AND SEAL
THIS 12 DAY OF DECEMBER, 2025

P.L.S. _____ L-3878

PRELIMINARY FOR REVIEW PURPOSES ONLY

NORTH CAROLINA PROFESSIONAL SEAL L-3878 CARLOS F. GOMEZ
PRELIMINARY FOR REVIEW PURPOSES ONLY

OWNERSHIP, DEDICATION, AND DRAINAGE CERTIFICATE

I HEREBY CERTIFY THAT PARKER & ROSE INVESTMENTS, LLC IS THE OWNER OF THE PROPERTY DESCRIBED HEREON, WHICH PROPERTY IS LOCATED WITHIN THE SUBDIVISION REGULATIONS JURISDICTION OF CURRITUCK COUNTY, THAT I HEREBY FREELY ADOPT THIS PLAT OF SUBDIVISION AND IRREVOCABLY DEDICATE TO PUBLIC USE ALL AREAS SHOWN ON THIS PLAT AS EASEMENTS, EXCEPT THOSE SPECIFICALLY INDICATED AS PRIVATE, AND THAT I WILL MAINTAIN ALL SUCH AREAS UNTIL THE OFFER OF DEDICATION IS ACCEPTED BY AN APPROPRIATE PUBLIC AUTHORITY, OR A PRIVATE ROAD MAINTENANCE AGREEMENT IS EXECUTED BY ALL PROPERTY OWNERS IN THIS SUBDIVISION. ALL PROPERTY SHOWN ON THIS PLAT AS DEDICATED FOR PUBLIC USE SHALL BE DEEMED TO BE DEDICATED FOR ANY OTHER PUBLIC USE AUTHORIZED BY LAW WHEN SUCH USE IS APPROVED BY THE APPROPRIATE PUBLIC AUTHORITY IN THE PUBLIC INTEREST.

I HEREBY CERTIFY THAT THIS DEVELOPMENT SHALL BE CONSTRUCTED AND MAINTAINED SO THAT NO ADJACENT PROPERTIES ARE UNREASONABLY BURDENED WITH SURFACE WATERS AS A RESULT OF THIS DEVELOPMENT. THIS DEVELOPMENT SHALL NOT IMPEDE NOR OBSTRUCT THE NATURAL FLOW OF WATER FROM HIGHER ADJACENT PROPERTIES NOR SHALL IT UNREASONABLY COLLECT AND CHANNEL SURFACE WATERS FROM THE DEVELOPMENT UNTO LOWER ADJACENT PROPERTIES.

_____ DATE _____
DAVID W. PARKER (MANAGING MEMBER)
(PARKER AND ROSE INVESTMENTS, LLC)

DAVID W. PARKER

I,_____ A NOTARY PUBLIC OF THE COUNTY OF_____ AND STATE OF _____, HEREBY CERTIFY THAT_____ DAVID W. PARKER _____ PERSONALLY APPEARED BEFORE ME AND ACKNOWLEDGED THE DUE EXECUTION OF THIS CERTIFICATE. WITNESS MY HAND AND OFFICIAL SEAL THIS THE_____ DAY OF_____, 2025.

_____ _____
NOTARY PUBLIC, MY COMMISION EXPIRES

APPROVAL CERTIFICATE

I HEREBY CERTIFY THAT THE SUBDIVISION SHOWN ON THIS PLAT IS IN ALL RESPECTS IN COMPLIANCE WITH THE CURRITUCK COUNTY UNIFIED DEVELOPMENT ORDINANCE AND, THEREFORE, THIS PLAT HAS BEEN APPROVED BY THE CURRITUCK COUNTY TECHNICAL REVIEW COMMITTEE AND SIGNED BY THE ADMINSTRATOR, SUBJECT TO ITS BEING RECORDED IN THE CURRITUCK COUNTY REGISTRY WITHIN 90 DAYS OF THE DATE BELOW.

_____ _____
ADMINISTRATOR DATE

Coastal ENGINEERING & SURVEYING, INC.
P.O. Box 1129
4425 N. CROATAN HWY.
Kitty Hawk, N.C. 27949
(252)-261-4151
(252)-261-1333
C-0836 Civil - Structural Site Development

REVISIONS

NO.	DATE	DESCRIPTION	BY
1	11/20/24	REVISED LOTS PER 60' VEPCO EASEMENT	JCB
2	3/13/25	REVISED PER COUNTY COMMENTS	JCB
3	08/13/25	MULTIFAMILY AREA, LOT 35 & 36 RESHAPE	VGA

PRELIMINARY SUBDIVISION PLAT FOR:
COINJOCK MEADOWS PHASE II
CRAWFORD TWSP. CURRITUCK COUNTY NORTH CAROLINA
PARKER AND ROSE INVESTMENTS, LLC

DATE: 12/12/25	SCALE: AS SHOWN
CHECKED: CFG	DRAWN: JCB/VGA
PROJECT NO: P1093.24	
CAD FILE: P1093 SUBDIVISION	
SHEET: 1 OF 2	

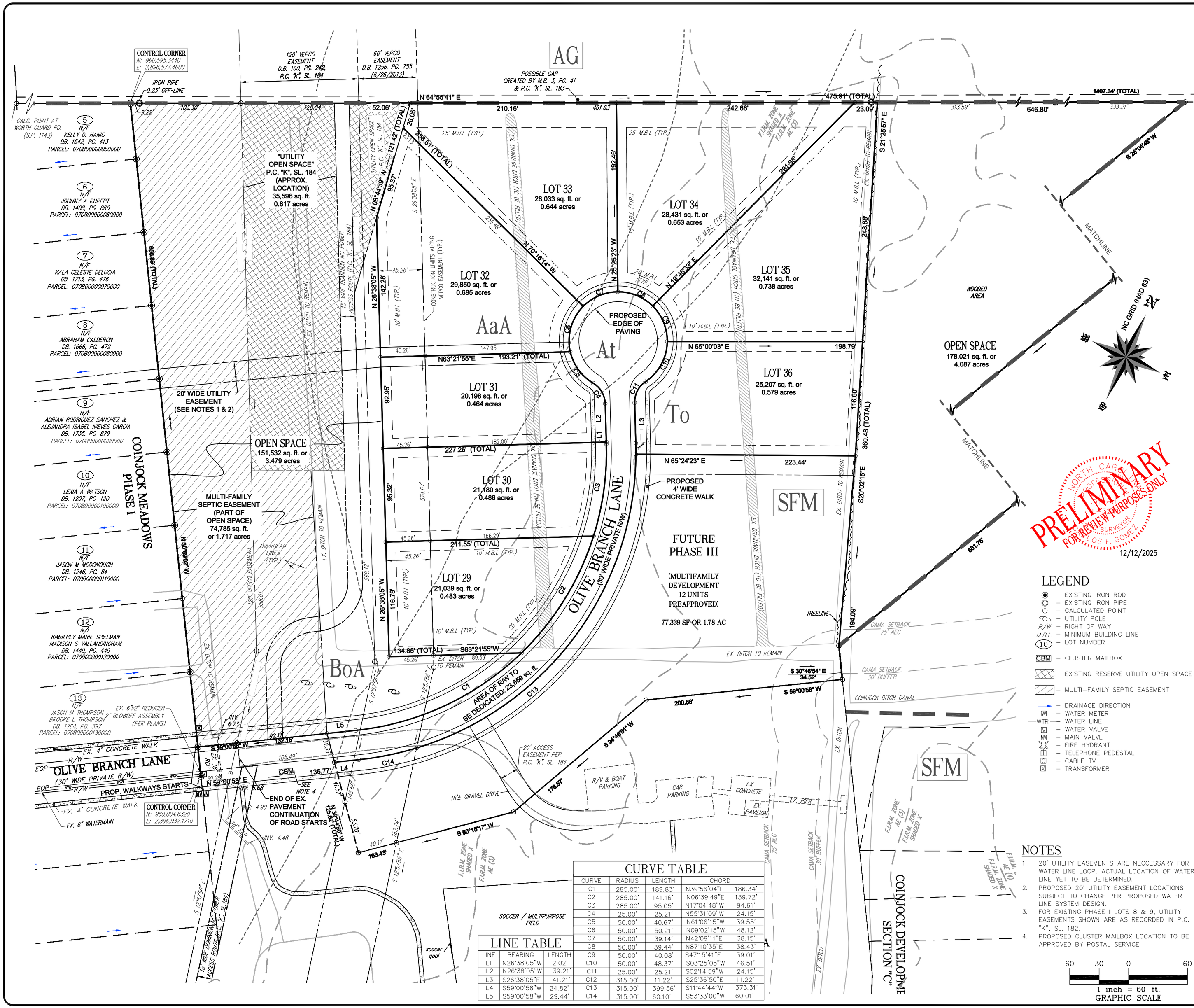

LEGEND

- EXISTING IRON ROD
- EXISTING IRON PIPE
- CALCULATED POINT
- UTILITY POLE
- R/W – RIGHT OF WAY
- M.B.L. – MINIMUM BUILDING LINE
- 10 – LOT NUMBER
- CBM – CLUSTER MAILBOX
- EXISTING RESERVE UTILITY OPEN SPACE
- MULTI-FAMILY SEPTIC EASEMENT
- DRAINAGE DIRECTION
- WATER METER
- WTR – WATER LINE
- WATER VALVE
- MAIN VALVE
- FIRE HYDRANT
- TELEPHONE PEDESTAL
- CABLE TV
- TRANSFORMER

NOTES

1. 20' UTILITY EASEMENTS ARE NECCESSARY FOR WATER LINE LOOP. ACTUAL LOCATION OF WATER LINE YET TO BE DETERMINED.
2. PROPOSED 20' UTILITY EASEMENT LOCATIONS SUBJECT TO CHANGE PER PROPOSED WATER LINE SYSTEM DESIGN.
3. FOR EXISTING PHASE I LOTS 8 & 9, UTILITY EASEMENTS SHOWN ARE AS RECORDED IN P.C. "K", SL. 182.
4. PROPOSED CLUSTER MAILBOX LOCATION TO BE APPROVED BY POSTAL SERVICE

60 30 0 60
1 inch = 60 ft.
GRAPHIC SCALE

CURVE TABLE

CURVE	RADIUS	LENGTH	CHORD	
C1	285.00'	189.83'	N39°56'04"E	186.34'
C2	285.00'	141.16'	N06°39'49"E	139.72'
C3	285.00'	95.05'	N17°04'48"W	94.61'
C4	25.00'	25.21'	N55°31'09"W	24.15'
C5	50.00'	40.67'	N61°06'15"W	39.55'
C6	50.00'	50.21'	N09°02'15"W	48.12'
C7	50.00'	39.14'	N42°09'11"E	38.15'
C8	50.00'	39.44'	N87°10'35"E	38.43'
C9	50.00'	40.08'	S47°15'41"E	39.01'
C10	50.00'	48.37'	S03°25'05"W	46.51'
C11	25.00'	25.21'	S02°14'59"W	24.15'
C12	315.00'	11.22'	S25°36'50"E	11.22'
C13	315.00'	399.56'	S11°44'44"W	373.31'
C14	315.00'	60.10'	S53°33'00"W	60.01'

LINE TABLE

LINE	BEARING	LENGTH
L1	N26°38'05"W	2.02'
L2	N26°38'05"W	39.21'
L3	S26°38'05"E	41.21'
L4	S59°00'58"W	24.82'
L5	S59°00'58"W	29.44'

Coastal ENGINEERING & SURVEYING, INC.
P.O. Box 1129
4425 N. CROATAN HWY.
Kitty Hawk, N.C. 27949
(252)-261-4151
(252)-261-1333
C-0836 Civil – Structural Site Development

REVISIONS

NO.	DATE	DESCRIPTION	BY
1	11/20/24	REVISED LOTS PER 60' VEPCO EASEMENT	JCB
2	3/13/25	REVISED PER COUNTY COMMENTS	JCB
3	08/13/25	MULTIFAMILY AREA, LOT 35 & 36 RESHAPE	VGA

PRELIMINARY SUBDIVISION PLAT FOR:

COINJOCK MEADOWS PHASE II

CRAWFORD TWSP. CURRITUCK COUNTY NORTH CAROLINA

PARKER AND ROSE INVESTMENTS, LLC

DATE: 12/12/2025	SCALE: 1"=60'
CHECKED: CFG	DRAWN: JCB/VGA
PROJECT NO: P1093.24	
CAD FILE: P1093 SUBDIVISION	
SHEET: 2 OF 2	

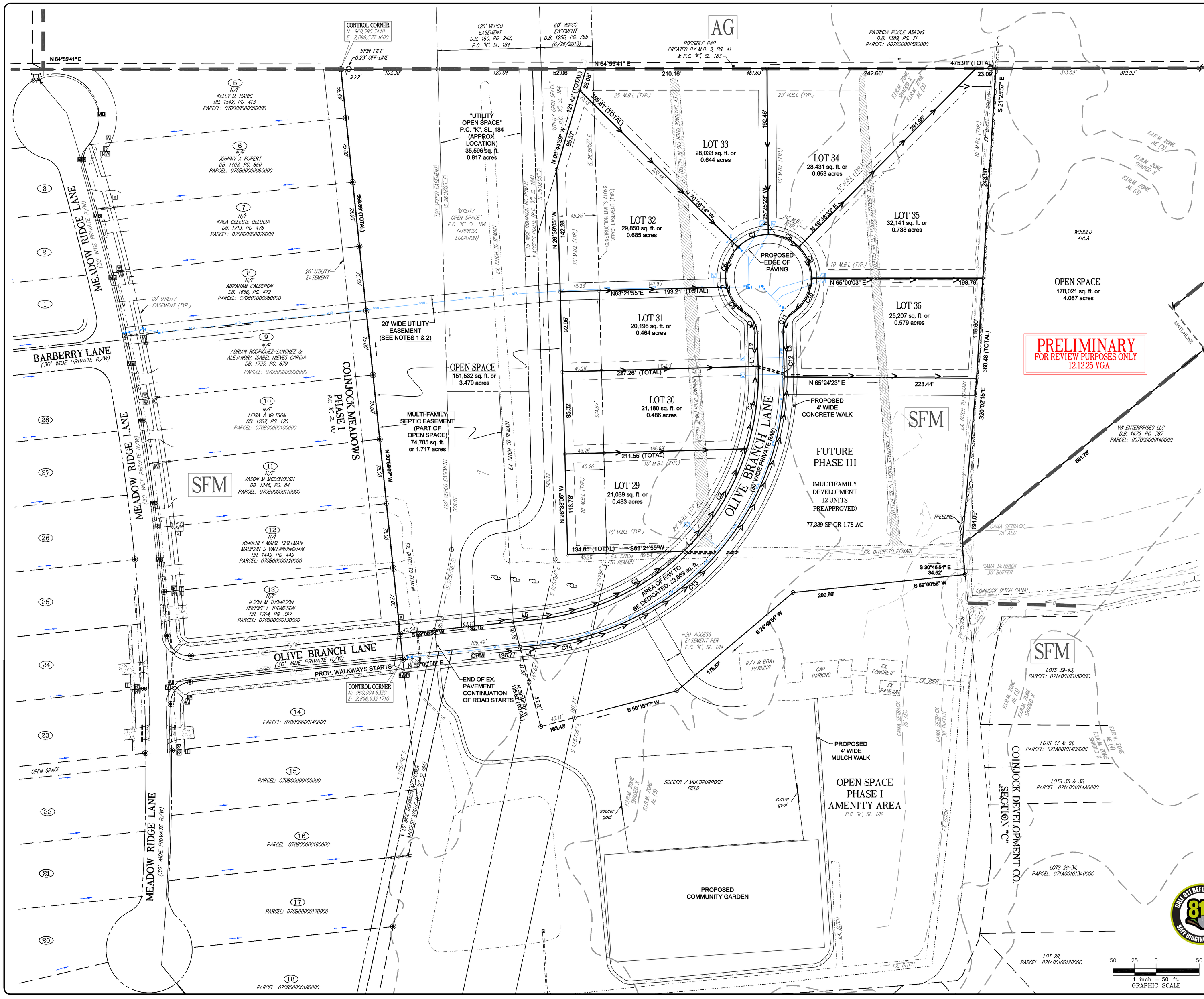

CURVE TABLE

CURVE	RADIUS	LENGTH	CHORD	
C1	285.00'	189.83'	N39°56'04"E	186.34'
C2	285.00'	141.16'	N06°39'49"E	139.72'
C3	285.00'	95.05'	N17°04'48"W	94.61'
C4	25.00'	25.21'	N55°31'09"W	24.15'
C5	50.00'	40.67'	N61°06'15"W	39.55'
C6	50.00'	50.21'	N09°02'15"W	48.12'
C7	50.00'	39.14'	N42°09'11"E	38.15'
C8	50.00'	39.44'	N87°10'35"E	38.43'
C9	50.00'	40.08'	S47°15'41"E	39.01'
C10	50.00'	48.37'	S03°25'05"W	46.51'
C11	25.00'	25.21'	S02°14'59"W	24.15'
C12	315.00'	11.22'	S25°36'50"E	11.22'
C13	315.00'	399.56'	S11°44'44"W	373.31'
C14	315.00'	60.10'	S53°33'00"W	60.01'

LINE TABLE

LINE	BEARING	LENGTH
L1	N26°38'05"W	2.02'
L2	N26°38'05"W	39.21'
L3	S26°38'05"E	41.21'
L4	S59°00'58"W	24.82'
L5	S59°00'58"W	29.44'

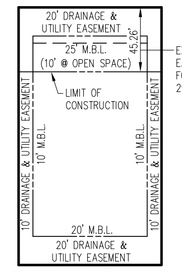

TYPICAL LOT EASEMENT & SETBACK LAYOUT

NOT TO SCALE

LEGEND

- EXISTING IRON ROD
- EXISTING IRON PIPE
- CALCULATED POINT
- UTILITY POLE
- R/W – RIGHT OF WAY
- M.B.L. – MINIMUM BUILDING LINE
- LOT NUMBER
- MB – MAILBOX
- CMB – CLUSTER MAILBOX
- EX. DRAINAGE DIRECTION
- PROP. FIRE HYDRANT
- PROP. DRAINAGE SWALES
- PROP. STORMWATER PIPES
- PROP. WATER METER
- WTR – PROP. WATER LINE
- PROP. WATER VALVE
- EX. WATER METER
- WTR – EX. WATER LINE
- EX. WATER VALVE
- EX. MAIN VALVE
- EX. FIRE HYDRANT
- TELEPHONE PEDESTAL
- CABLE TV
- TRANSFORMER

NOTES

1. OWNER/APPLICANT: PARKER & ROSE INVESTMENTS, LLC
   144 MEADOWLARK ROAD
   GOLDSBORO, NC 27534
2. PROPERTY ADDRESS: OLIVE BRANCH LANE
3. PARCEL: 007000001300000, PIN: 8996-70-1586
4. PARCEL AS RECORDED IN P.C. "K", SL. 182 OF THE CURRITUCK COUNTY REGISTRY.
5. LOT ZONING: SFM (SINGLE-FAMILY RESIDENTIAL MAINLAND)
6. AREA = 644,434 sq. ft. = 14.794 acres
7. AREA CALCULATED BY COORDINATE METHOD.
8. THIS SURVEY WAS PERFORMED WITHOUT THE BENEFIT OF A TITLE COMMITMENT.
9. THIS PARCEL MAY BE SUBJECT TO EASEMENTS NOT SHOWN HEREON.
10. LOT MAY BE IN AN AREA OF ENVIRONMENTAL CONCERN. INDIVIDUAL PERMITS MAY BE REQUIRED.
11. PROPERTY IS LOCATED IN F.I.R.M. ZONES AS SHOWN, MAP NOS. 3720896600K AND 3720896400L, DATED DECEMBER 21, 2018. USE OF LAND WITHIN THE FLOODWAY OR FLOODPLAIN AND FLOOD ZONES SUBJECT TO CHANGE BY FEMA.

SHEET INDEX

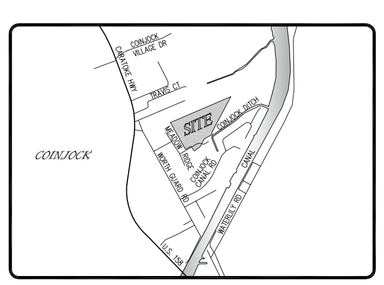

VICINITY MAP
N.T.S.

P.O. Box 1129
4425 N. Croatan Hwy.
Kitty Hawk, N.C. 27949
(252)-261-4151
(252)-261-1333
Civil – Structural
Site Development
Coastal ENGINEERING & SURVEYING, INC.
C-0836

REVISIONS

NO.	DATE	DESCRIPTION	BY

OVERALL PLAN FOR:

COINJOCK MEADOWS, P.R.D., PHASE II (LOTS 29-36)

CURRITUCK COUNTY COINJOCK, NORTH CAROLINA

CRAWFORD TWSP.

PARKER & ROSE INVESTMENTS, LLC

DATE: 12/12/2025	SCALE: 1"=50'
CHECKED: CFG	DRAWN: EG/VGA
PROJECT NO: P1093.24	
CAD FILE: P1093 OVERALL	
SHEET: C1 OF C7	

PRELIMINARY
FOR REVIEW PURPOSES ONLY
12.12.25 VGA

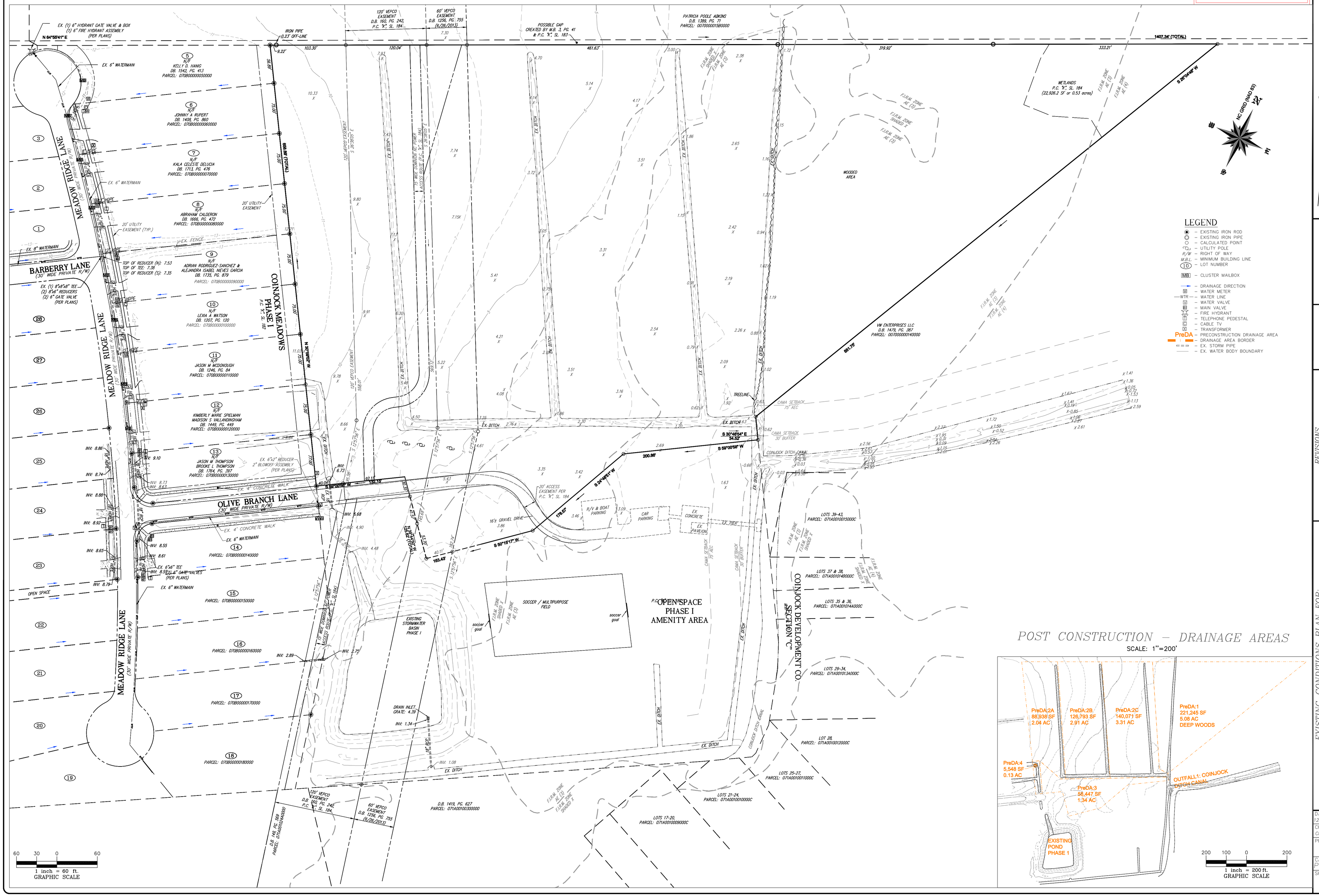

LEGEND

- EXISTING IRON ROD
- EXISTING IRON PIPE
- CALCULATED POINT
- UTILITY POLE
- R/W – RIGHT OF WAY
- M.B.L. – MINIMUM BUILDING LINE
- 10 – LOT NUMBER
- MB – CLUSTER MAILBOX
- DRAINAGE DIRECTION
- WM – WATER METER
- WTR – WATER LINE
- WV – WATER VALVE
- MV – MAIN VALVE
- FH – FIRE HYDRANT
- TP – TELEPHONE PEDESTAL
- CATV – CABLE TV
- TF – TRANSFORMER
- PreDA – PRECONSTRUCTION DRAINAGE AREA
- DRAINAGE AREA BORDER
- EX. STORM PIPE
- EX. WATER BODY BOUNDARY

POST CONSTRUCTION – DRAINAGE AREAS

SCALE: 1"=200'

P.O. Box 1129
4425 N. Croatan Hwy.
Kitty Hawk, N.C. 27949
(252)-261-4151
(252)-261-1333
Civil – Structural
Site Development
Coastal ENGINEERING & SURVEYING, INC.
C-0836

REVISIONS

NO.	DATE	DESCRIPTION	BY

EXISTING CONDITIONS PLAN FOR:

COINJOCK MEADOWS, P.R.D., PHASE II (LOTS 29-36)

CRAWFORD TWSP. CURRITUCK COUNTY COINJOCK, NORTH CAROLINA

PARKER & ROSE INVESTMENTS, LLC

DATE: 12/12/2025	SCALE: AS SHOWN
CHECKED: CFG	DRAWN: VGA
PROJECT NO: P1093.24	
CAD FILE: P1093 EX. COND	
SHEET: C2 OF C7	

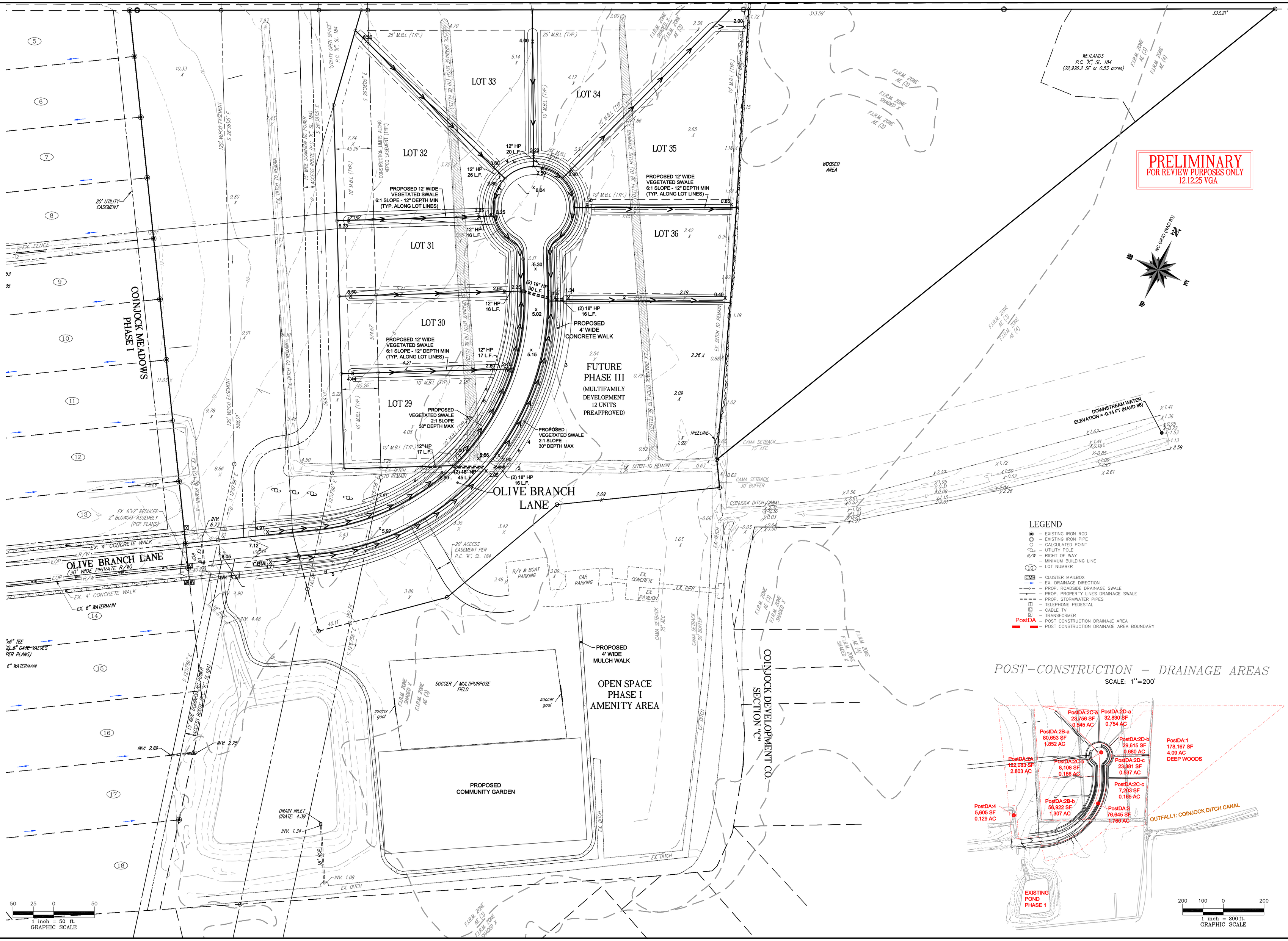

LEGEND

- EXISTING IRON ROD
- EXISTING IRON PIPE
- CALCULATED POINT
- UTILITY POLE
- R/W – RIGHT OF WAY
- MINIMUM BUILDING LINE
- (10) – LOT NUMBER
- CMB – CLUSTER MAILBOX
- EX. DRAINAGE DIRECTION
- PROP. ROADSIDE DRAINAGE SWALE
- PROP. PROPERTY LINES DRAINAGE SWALE
- PROP. STORMWATER PIPES
- TELEPHONE PEDESTAL
- CABLE TV
- TRANSFORMER
- PostDA – POST CONSTRUCTION DRAINAJE AREA
- POST CONSTRUCTION DRAINAGE AREA BOUNDARY

POST–CONSTRUCTION – DRAINAGE AREAS

SCALE: 1"=200'

P.O. Box 1129
4425 N. Croatan Hwy.
Kitty Hawk, N.C. 27949
(252)-261-4151
(252)-261-1333
Fax

Civil – Structural
Site Development

Coastal ENGINEERING & SURVEYING, INC.
C-0836

REVISIONS

NO.	DATE	DESCRIPTION	BY

GRADING AND DRAINAGE PLAN FOR:

COINJOCK MEADOWS, P.R.D., PHASE II (LOTS 29-36)

CRAWFORD TWSP. CURRITUCK COUNTY COINJOCK, NORTH CAROLINA

PARKER & ROSE INVESTMENTS, LLC

DATE: 12/12/2025	SCALE: AS SHOWN
CHECKED: CFG	DRAWN: EG/VGA

PROJECT NO: P1093.24

CAD FILE: P1093 G&D

SHEET: C3 OF C7

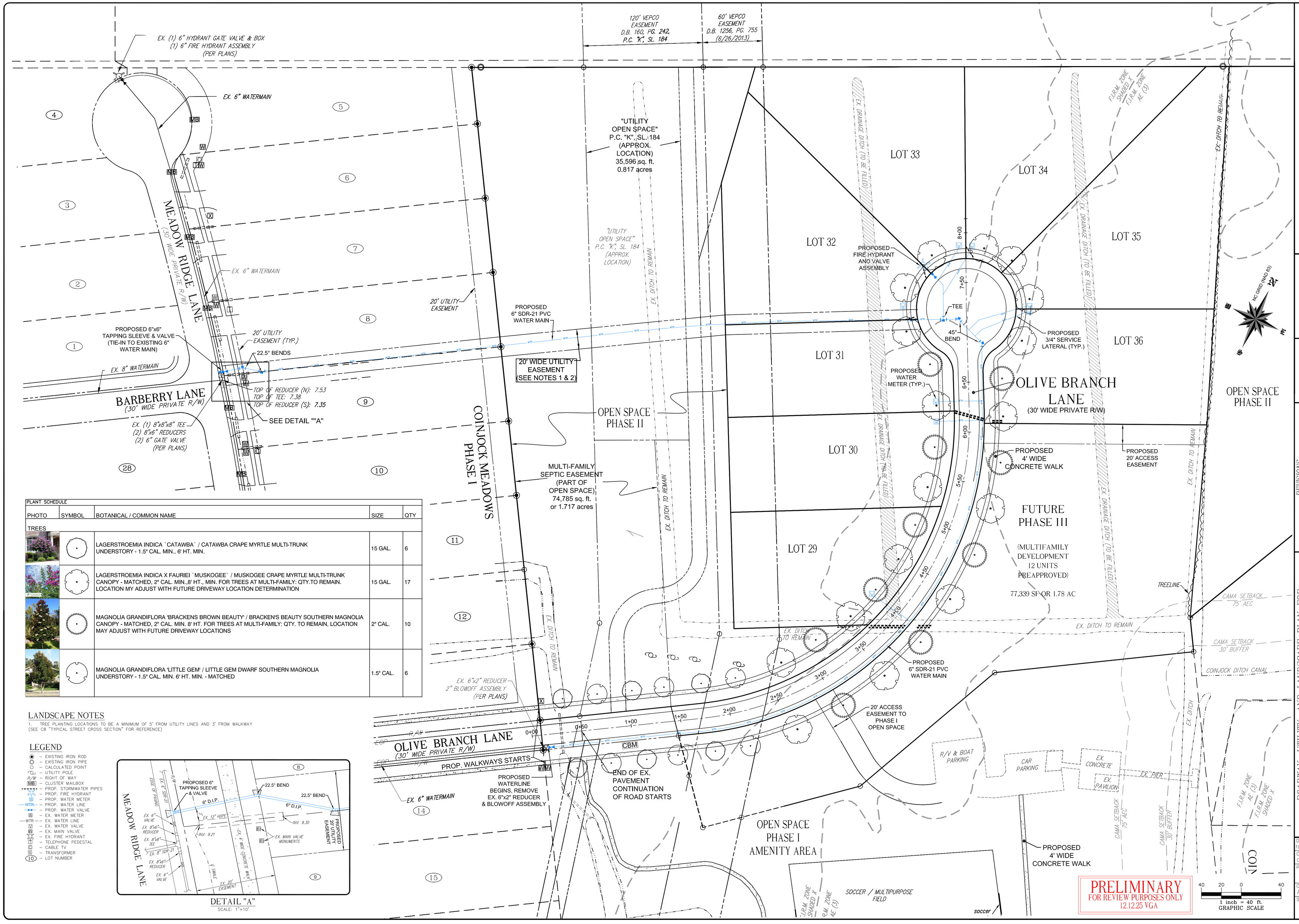

PLANT SCHEDULE				
PHOTO	SYMBOL	BOTANICAL / COMMON NAME	SIZE	QTY
TREES				
		LAGERSTROEMIA INDICA `CATAWBA` / CATAWBA CRAPE MYRTLE MULTI-TRUNK UNDERSTORY - 1.5" CAL. MIN., 6' HT. MIN.	15 GAL.	6
		LAGERSTROEMIA INDICA X FAURIEI `MUSKOGEE` / MUSKOGEE CRAPE MYRTLE MULTI-TRUNK CANOPY - MATCHED, 2" CAL. MIN.,8' HT., MIN. FOR TREES AT MULTI-FAMILY: QTY.TO REMAIN. LOCATION MY ADJUST WITH FUTURE DRIVEWAY LOCATION DETERMINATION	15 GAL.	17
		MAGNOLIA GRANDIFLORA 'BRACKENS BROWN BEAUTY' / BRACKEN'S BEAUTY SOUTHERN MAGNOLIA CANOPY - MATCHED, 2" CAL. MIN. 8' HT. FOR TREES AT MULTI-FAMILY: QTY. TO REMAIN, LOCATION MAY ADJUST WITH FUTURE DRIVEWAY LOCATIONS	2" CAL.	10
		MAGNOLIA GRANDIFLORA 'LITTLE GEM' / LITTLE GEM DWARF SOUTHERN MAGNOLIA UNDERSTORY - 1.5" CAL. MIN. 6' HT. MIN. - MATCHED	1.5" CAL.	6

LANDSCAPE NOTES

1. TREE PLANTING LOCATIONS TO BE A MINIMUM OF 5' FROM UTILITY LINES AND 3' FROM WALKWAY (SEE C8 "TYPICAL STREET CROSS SECTION" FOR REFERENCE)

LEGEND

- – EXISTING IRON ROD
- – EXISTING IRON PIPE
- – CALCULATED POINT
- – UTILITY POLE
- R/W – RIGHT OF WAY
- MB – CLUSTER MAILBOX
- – PROP. STORMWATER PIPES
- – PROP. FIRE HYDRANT
- – PROP. WATER METER
- WTR – PROP. WATER LINE
- – PROP. WATER VALVE
- – EX. WATER METER
- WTR – EX. WATER LINE
- – EX. WATER VALVE
- – EX. MAIN VALVE
- – EX. FIRE HYDRANT
- – TELEPHONE PEDESTAL
- – CABLE TV
- – TRANSFORMER
- (10) – LOT NUMBER

DETAIL "A"
SCALE: 1"=10'

P.O. Box 1129
4425 N. Croatan Hwy.
Kitty Hawk, N.C. 27949
(252)-261-4151
(252)-261-1333
Civil – Structural
Site Development
Coastal
ENGINEERING & SURVEYING, INC.
C-0836

REVISIONS

NO.	DATE	DESCRIPTION	BY

ROADWAY, UTILITY, AND LANDSCAPE PLAN FOR:

COINJOCK MEADOWS, P.R.D., PHASE II (LOTS 29-36)

CRAWFORD TWSP. CURRITUCK COUNTY COINJOCK, NORTH CAROLINA

PARKER & ROSE INVESTMENTS, LLC

DATE: 10/29/2025	SCALE: 1"=40'
CHECKED: CFG	DRAWN: EG/VGA/NC
PROJECT NO: P1093.24	
CAD FILE: P1093 RW/UTY/LD	
SHEET: C4 OF C7	

Z:\Projects\P1000 - P1099\P1093.24 - Coinjock Meadows\dwg\PLANS FOR SUBMITTAL 12.10.25\P1093.C4 ROADWAY AND UTILITY-12.12.25.dwg, 12/12/2025 5:53:58 PM

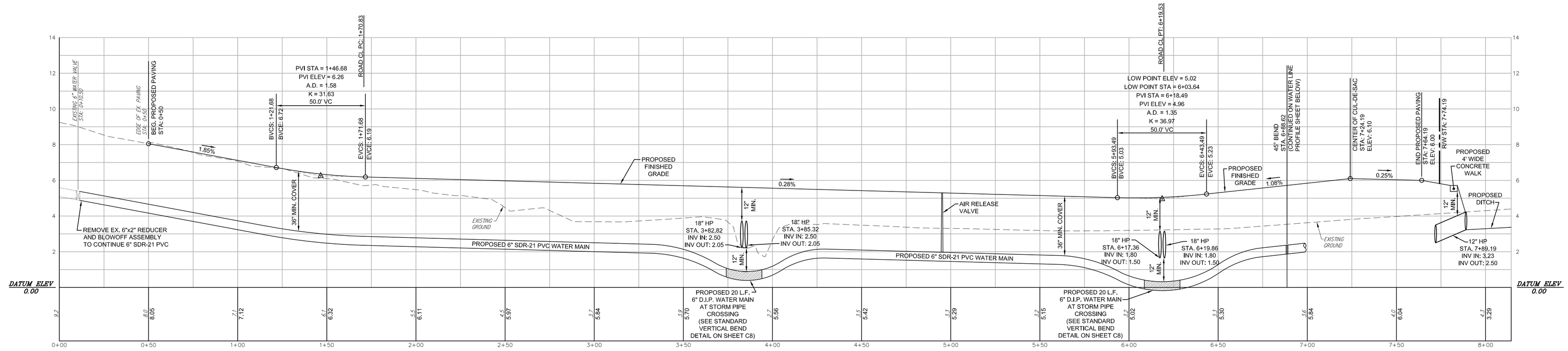

OLIVE BRANCH LANE AND WATER MAIN PROFILE

HORIZONTAL SCALE: 1"=30'
VERTICAL SCALE: 1"=3'

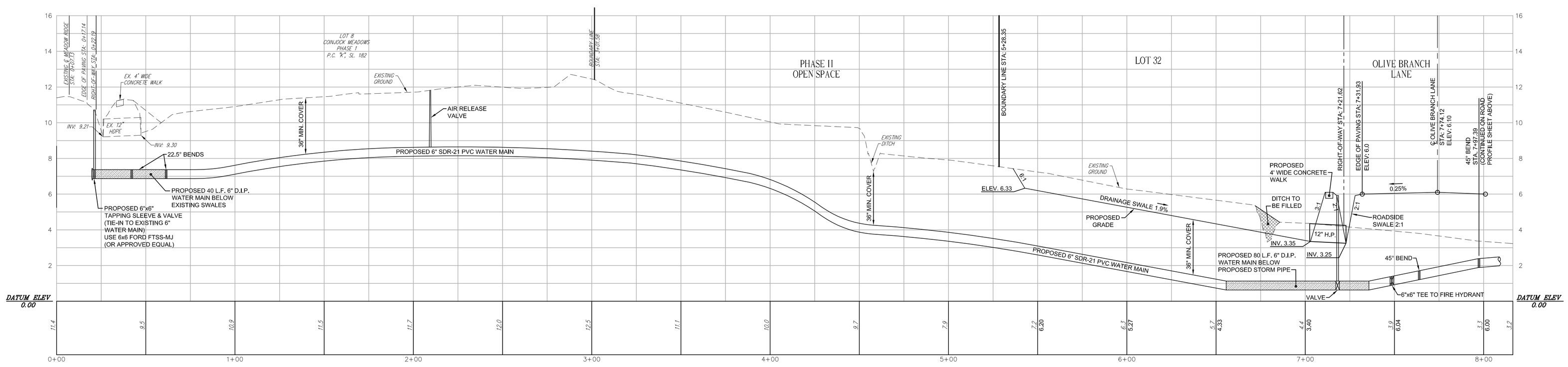

WATER MAIN PROFILE FROM EXISTING TIE-IN TO CUL-DE-SAC

HORIZONTAL SCALE: 1"=30'
VERTICAL SCALE: 1"=3'

PRELIMINARY
FOR REVIEW PURPOSES ONLY
12.12.25 VGA

30 15 0 30
1 inch = 30 ft.
GRAPHIC SCALE

P.O. Box 1129
4425 N. Croatan Hwy.
Kitty Hawk, N.C. 27949
(252)-261-4151
(252)-261-1333
Civil Structural
Site Development
Coastal
ENGINEERING & SURVEYING, INC.
C-0836

REVISIONS

NO.	DATE	DESCRIPTION	BY

ROAD AND WATER LINE PROFILES FOR:

COINJOCK MEADOWS, P.R.D., PHASE II (LOTS 29-36)

POPLAR BRANCH TWSP. CURRITUCK COUNTY COINJOCK, NORTH CAROLINA

PARKER & ROSE INVESTMENTS, LLC

DATE: 12/10/2025	SCALE: 1"=30'
CHECKED: CFG	DRAWN: EG/VGA/JCB
PROJECT NO: P1093.24	
CAD FILE: P1093 PROFILES	
SHEET: C5.A OF C7	

Z:\Projects\P1000 - P1099\P1093.24 - Coinjock Meadows\dwg\PLANS FOR SUBMITTAL 12.10.25\CSA-PROFILES.dwg 12/12/2025 5:34:08 PM

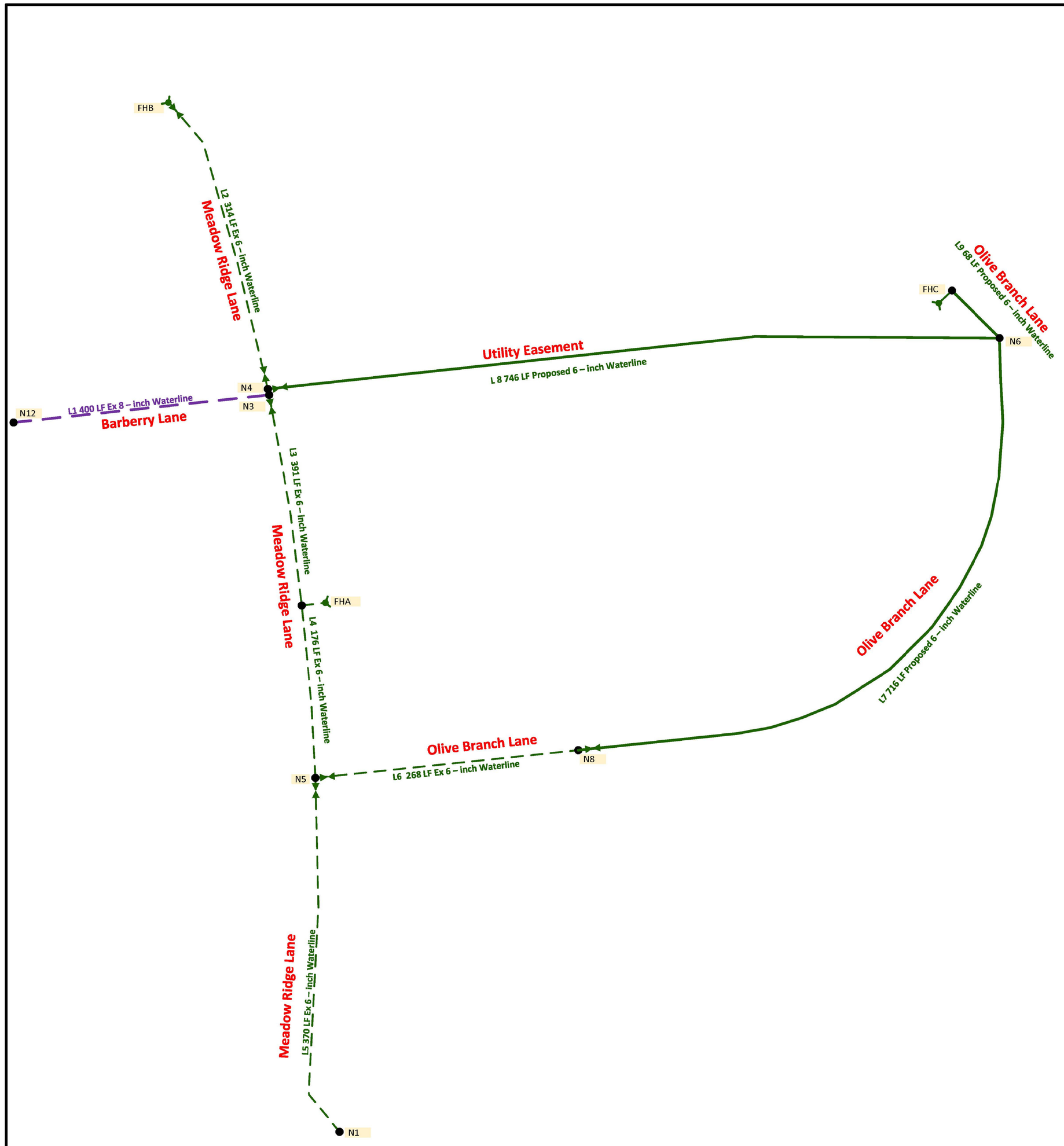

PRELIMINARY
FOR REVIEW PURPOSES ONLY
12.10.25 VGA

Legend

- Node
- Existing 6 – inch Waterline
- Ex 6" GV
- Proposed 8 – inch Waterline
- Ex 6" GV

Node ID	Demand GPM	Head ft	Pressure psi	Quality
Junc N2	0.00	66.62	23.67	0.00
Junc N3	2.00	64.19	22.61	0.00
Junc HydB	2.00	64.07	23.00	0.00
Junc HydA	0.00	64.09	22.57	0.00
Junc FHC	500.00	62.37	24.86	0.00
Junc N6	2.00	63.59	26.04	0.00
Junc N8	0.00	63.89	25.95	0.00
Junc N5	2.00	64.00	22.53	0.00
Junc N4	0.00	64.07	22.56	0.00
Junc N1	2.00	64.00	27.73	0.00
Tank Tank	-510.00	127.50	50.05	0.00

Link ID	Flow GPM	Velocity fps	Unit Headloss ft/Kft	Friction Factor	Reaction Rate mg/L/d	Quality	Status
Pipe L1	510.00	3.26	6.09	0.025	0.00	0.00	Open
Pipe System	-510.00	3.26	6.09	0.025	0.00	0.00	Open
Pipe L3	-60.63	0.69	0.48	0.033	0.00	0.00	Open
Pipe L9	-500.00	5.67	17.91	0.018	0.00	0.00	Open
Pipe 1	60.63	0.69	0.48	0.033	0.00	0.00	Open
Pipe L6	56.63	0.64	0.42	0.033	0.00	0.00	Open
Pipe L2	2.00	0.02	0.00	0.055	0.00	0.00	Open
Pipe L5	2.00	0.02	0.00	0.054	0.00	0.00	Open
Pipe L1A	447.37	5.08	19.39	0.024	0.00	0.00	Open
Pipe L7	56.63	0.64	0.42	0.033	0.00	0.00	Open
Pipe L8	445.37	5.05	0.65	0.001	0.00	0.00	Open

NORTH CAROLINA
FIRM LICENSE
C-4218
BURGIN ENGINEERING, INC.

Burgin Engineering, Inc.
PO Box 1804
Irmo, SC 29063

811 Know what's below. Call before you dig.

Owner: Coastal Engineering & Surveying, Inc.

Designed By:	RGB
Drawn By:	RGB
Checked By:	RGB
Approved By:	RGB
Date:	April 25, 2025
Project:	126-001
Sheet Size:	22x34
Scale:	As Shown

Sheet Title: Water System Model

Project: CoinJock Meadows P.R.D. Phase 2

NORTH CAROLINA PROFESSIONAL SEAL 10184 ENGINEER
April 25, 2025

Sheet: Water Model

P.O. Box 1129
4425 N. Croatan Hwy.
Kitty Hawk, N.C. 27949
(252)-261-4151
(252)-261-1333
Civil – Structural
Site Development
Coastal ENGINEERING & SURVEYING, INC.
C-0836

REVISIONS

NO.	DATE	DESCRIPTION	BY

WATER SYSTEM MODEL FOR:

COINJOCK MEADOWS, P.R.D., PHASE II (LOTS 29-36)

POPLAR BRANCH TWSP. CURRITUCK COUNTY COINJOCK, NORTH CAROLINA

PARKER & ROSE INVESTMENTS, LLC

DATE: 12/10/2025	SCALE: 1"=30'
CHECKED: CFG	DRAWN: EG/VGA/JCB

PROJECT NO: P1093.24

CAD FILE: P1093 WATER

SHEET: C5.B OF C7

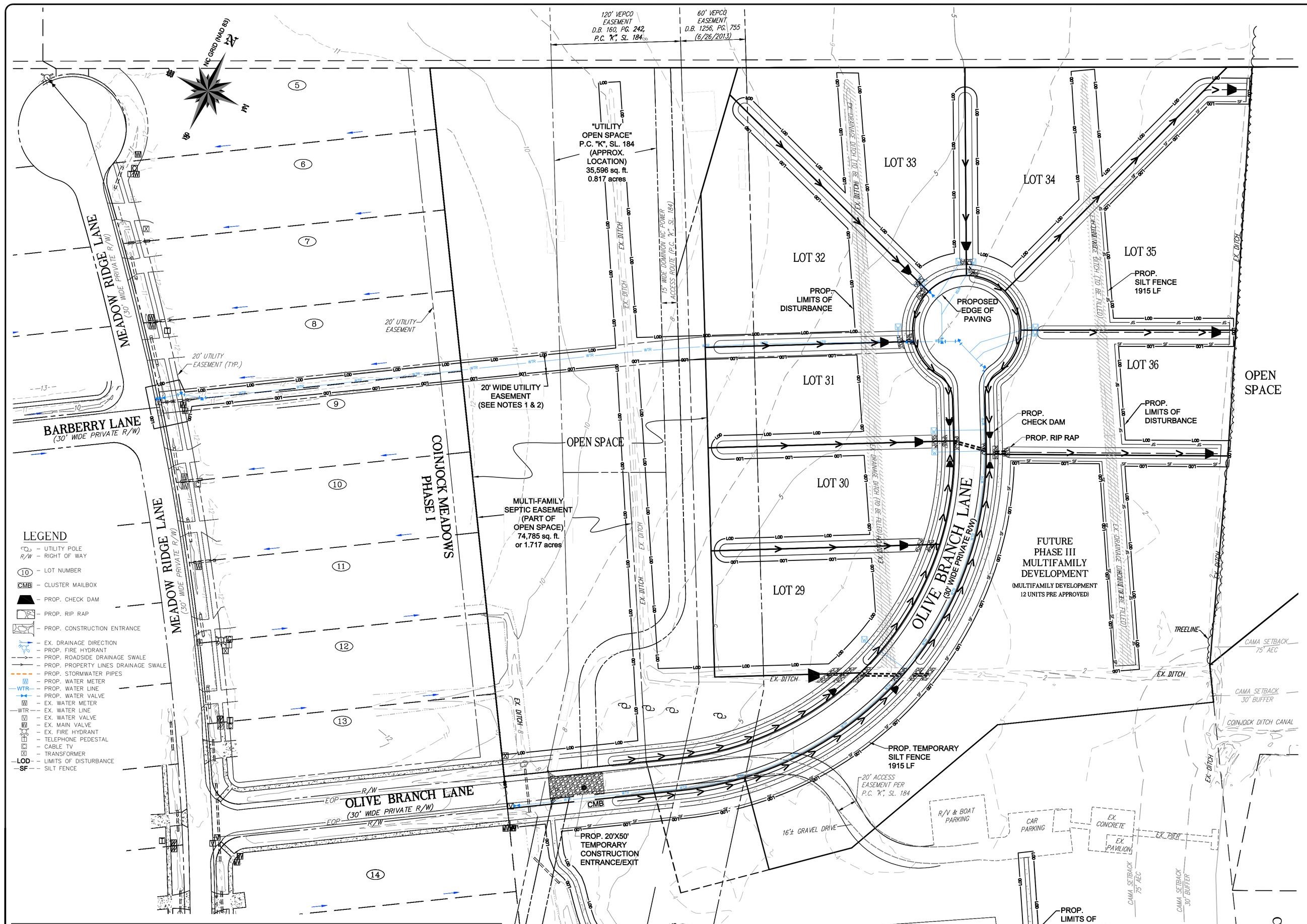

LEGEND

- UTILITY POLE
- R/W – RIGHT OF WAY
- (10) – LOT NUMBER
- CMB – CLUSTER MAILBOX
- PROP. CHECK DAM
- PROP. RIP RAP
- PROP. CONSTRUCTION ENTRANCE
- EX. DRAINAGE DIRECTION
- PROP. FIRE HYDRANT
- PROP. ROADSIDE DRAINAGE SWALE
- PROP. PROPERTY LINES DRAINAGE SWALE
- PROP. STORMWATER PIPES
- PROP. WATER METER
- WTR – PROP. WATER LINE
- PROP. WATER VALVE
- EX. WATER METER
- WTR – EX. WATER LINE
- EX. WATER VALVE
- EX. MAIN VALVE
- EX. FIRE HYDRANT
- TELEPHONE PEDESTAL
- CABLE TV
- TRANSFORMER
- LOD – LIMITS OF DISTURBANCE
- SF – SILT FENCE

EROSION AND SEDIMENT CONTROL GENERAL NOTES

1. CONTRACTOR SHALL TAKE CARE NOT TO "TRACK" MUD OFF SITE WITH CONSTRUCTION VEHICLES AND EQUIPMENT.
2. ALL AREAS NOT STABILIZED BY STONE BASE COARSE OR PAVING ARE TO BE STABILIZED ACCORDING TO THE STABILIZATION SCHEDULE IMMEDIATELY AFTER DESIGN GRADE IS ACHIEVED. HYDRO SEEDING IS RECOMMENDED WHERE SLOPES EXCEED 3:1.
3. REMOVE GOOD TOPSOIL FROM AREAS TO BE GRADED AND FILLED, AND PRESERVE IT FOR USE IN FINISHING THE GRADING OF ALL CRITICAL AREAS.
4. SCARIFY AREAS TO BE TOPSOILED TO A MINIMUM DEPTH OF 2 INCHES BEFORE PLACING TOPSOIL (PRACTICE 6.04, TOPSOILING).
5. CLEAR AND GRUB AREAS TO BE FILLED TO REMOVE TREES, VEGETATION, ROOTS, OR OTHER OBJECTIONABLE MATERIAL THAT WOULD AFFECT THE PLANNED STABILITY OF THE FILL.
6. ENSURE THAT FILL MATERIAL IS FREE OF BRUSH, RUBBISH, ROCKS, LOGS, STUMPS, BUILDING DEBRIS, AND OTHER MATERIALS INAPPROPRIATE FOR CONSTRUCTING STABLE FILLS.
7. PLACE ALL FILL IN LAYERS NOT TO EXCEED 9 INCHES IN THICKNESS, AND COMPACT THE LAYERS AS REQUIRED TO REDUCE EROSION, SLIPPAGE OR SETTLEMENT.
8. DO NOT INCORPORATE FROZEN MATERIAL OR SOFT, MUCKY, OR HIGHLY COMPRESSIBLE MATERIALS INTO FILL SLOPES.
9. DO NOT PLACE FILL ON A FROZEN FOUNDATION, DUE TO POSSIBLE SUBSIDENCE AND SLIPPAGE.
10. KEEP DIVERSIONS AND OTHER WATER CONVEYANCE MEASURES FREE OF SEDIMENT DURING ALL PHASED OF DEVELOPMENT.
11. HANDLE SEEPS OR SPRINGS ENCOUNTERED DURING CONSTRUCTION IN ACCORDANCE WITH APPROVED METHODS (PRACTICE 6.81, SUBSURFACE DRAIN).
12. SHOW TOPSOIL STOCKPILES, BORROW AREAS, AND SPOIL AREAS ON THE PLANS, AND MAKE SURE THEY ARE ADEQUATELY PROTECTED FROM EROSION. INCLUDE FINAL STABILIZATION OF THESE AREAS IN THE PLAN
13. IN THE EVENT EARTHWORK OPERATIONS ARE HALTED FOR THE WINTER MONTHS, BEFORE FINAL GRADING AND SEEDING OF ALL DISTURBED AREAS ARE COMPLETED, THOSE AREAS SHALL BE EITHER SEEDED OR STABILIZED WITH MULCH.
14. ALL DISTURBED SOIL SURFACES, INCLUDING SOIL STOCKPILES AND PERIMETER CONTROLS ARE SUBJECT TO EROSION AND SHALL BE STABILIZED EITHER TEMPORARILY OR PERMANENTLY WITHIN THIRTY (30) CALENDAR DAYS.

EROSION AND SEDIMENT CONTROL MAINTENANCE NOTES

1. PERIODICALLY CHECK ALL GRADED AREAS AND THE SUPPORTING EROSION AND SEDIMENTATION CONTROL PRACTICES, ESPECIALLY AFTER HEAVY RAINFALLS. PROMPTLY REMOVE ALL SEDIMENT FROM DIVERSIONS AND OTHER WATER-ERODED AREAS BEFORE THEY BECOME SIGNIFICANT GULLIES IS AN ESSENTIAL PART OF AN EFFECTIVE EROSION AND SEDIMENTATION CONTROL PLAN.
2. ALL EROSION AND SEDIMENT CONTROL MAINTENANCE SHALL BE THE RESPONSIBILITY OF THE CONTRACTOR DURING CONSTRUCTION PHASE AND THE PROPERTY OWNER THEREAFTER.
3. PROVIDE A GROUNDCOVER (TEMPORARY OR PERMANENT) ON EXPOSED SLOPES WITHIN 7 TO 14 CALENDAR DAYS FOLLOWING COMPLETION OF ANY PHASE OF GRADING; AND A PERMANENT GROUNDCOVER FOR ALL DISTURBED AREAS WITHIN 14 WORKING DAYS FOLLOWING COMPLETION OF CONSTRUCTION OR DEVELOPMENT. SEE GROUND STABILIZATION CHART BELOW.

PERMANENT VEGETATION

SEEDING DATES: APRIL 1– SEPT 30

SEED MIXTURE	APPLICATION RATES/ACRE
BAHIA	50 LBS.
COMMON BERMUDA (UNHULLED)	50 LBS.
GERMAN MILLETT	15 LBS.
FESCUE	20 LBS.

FERTILIZER

26–13–13 @ 500 LB/ACRE

MULCH

APPLY 4,000 LB/ACRE STRAW. ANCHOR STRAW BY TACKING WITH ASPHALT, NETTING OR A MULCH ANCHORING TOOL. A DISK WITH BLADES SET NEARLY STRAIGHT CAN BE USED AS A MULCH ANCHORING TOOL.

TEMPORARY VEGETATION

SEEDING DATES: OCT. 1 – MARCH 31

SEED MIXTURE	APPLICATION RATES/ACRE
RYE GRAIN	175 LBS

FERTILIZER

10–10–10 @ 1000 LB/ACRE

MULCH

APPLY 4,000 LB/ACRE STRAW. ANCHOR STRAW BY TACKING WITH ASPHALT, NETTING OR A MULCH ANCHORING TOOL. A DISK WITH BLADES SET NEARLY STRAIGHT CAN BE USED AS A MULCH ANCHORING TOOL.

GENERAL:

– FERTILIZER RATES SHOWN ARE GENERAL RECOMMENDATIONS; FREQUENCY AND AMOUNT OF FERTILIZATION CAN BEST BE DETERMINED THROUGH SITE SPECIFIC SOIL TESTING.

– MINIMUM GERMINATION RATE SHALL BE GRATER THAN 80%

– SATISFACTORY STABILIZATION AND EROSION CONTROL REQUIRES A COMPLETE VEGETATIVE COVER EVEN ON SMALL BREACHES IN VEGETATIVE COVER CAN EXPAND RAPIDLY IF LEFT UNATTENDED. A SINGLE HEAVY RAIN IS OFTEN SUFFICIENT TO GREATLY ENLARGE BARE SPOTS, AND THE LONGER REPAIRS ARE DELAYED THE MORE COSTLY THEY BECOME. PROMPT ACTION WILL KEEP SEDIMENT LOSS AND REPAIR COST DOWN. NEW SEEDLINGS SHOULD BE INSPECTED FREQUENTLY AND MAINTENANCE PERFORMED AS NEEDED. IF RILLS AND GULLES DEVELOP THEY MUST BE FILLED, RE-SEEDED, AND MULCHED AS SOON AS POSSIBLE. DIVERSIONS MAY BE NEEDED UNTIL NEW PLANTS TAKE HOLD.

MAINTENANCE REQUIREMENTS EXTEND BEYOND THE SEEDING PHASE

WEAK OR DAMAGED SPOTS MUST BE RELIMED, FERTILIZED, MULCHED AND RE-SEEDED AS PROMPTLY AS POSSIBLE. REFERTILIZATION MAY BE NEEDED TO MAINTAIN PRODUCTIVE STANDS.

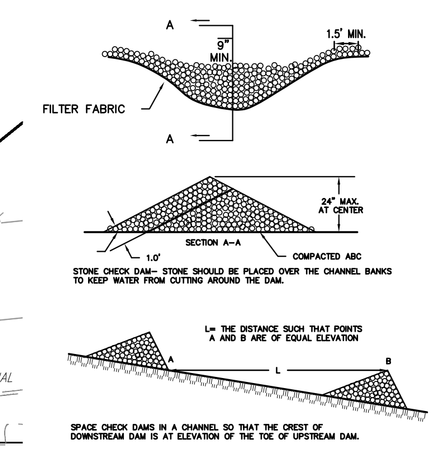

STONE CHECK DAM

N.T.S.

SUGGESTED E&SC CONSTRUCTION SEQUENCE

1) SURVEY STAKE LIMITS OF DISTURBANCE FOR SILT FENCE INSTALLATION
2) INSTALL STABILIZATION CONSTRUCTION ENTRANCE
3) CONSTRUCT THE STORM DRAIN IMPROVEMENTS FOR CONNECTION INTO EXISTING SYSTEM AND STABILIZE WITH SEEDING SCHEDULE
4) GRADE THE ROAD SIDE SWALES AND STABILIZE
5) STRIP VEGETATION AND ORGANIC SOIL WITHIN AREAS OF IMPROVEMENTS AND STOCKPILE TOPSOIL FOR REUSE IF APPLICABLE
6) ROUGH GRADE THE SITE AND STABILIZE
7) UTILIZE STOCKPILE TOPSOIL (IF AVAILIBLE) TO CAP AREAS TO FINISH GRADE IN AREAS INTENDED FOR PERMANENT GRASS SEEDING.

NOTE:
DEMOLITION DEBRIS SHALL BE DISPOSED OF IN AN APPROVED LAND FILL SITE. NO ON–SITE BURNING OR BURYING
SHALL BE PERMITTED.

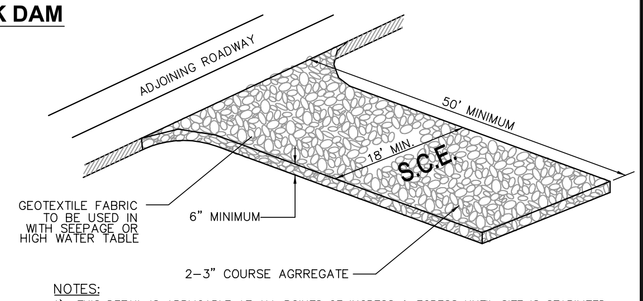

NOTES:

1) THIS DETAIL IS APPLICABLE AT ALL POINTS OF INGRESS & EGRESS UNTIL SITE IS STABILIZED. FREQUENT INSPECTIONS OF THE DEVICE AND TIMELY MAINTENANCE MUST BE PROVIDED.
2) CLEAR THE ENTRANCE OF ALL VEGETATION, ROOTS AND OTHER OBJECTABLE MATERIALS AND PROPERLY GRADE IT
3) TURNING RADIUS MUST BE SUFFICIENT TO ACCOMMODATE LARGE TRUCKS IS TO BE PROVIDED.
4) ENTRANCE(S) SHOULD BE LOCATED TO PROVIDE FOR MAXIMUM UTILITY BY ALL CONSTRUCTION VEHICLES.
5) ENTRANCE MUST BE MAINTAINED IN A CONDITION WHICH WILL PREVENT TRACKING OR DIRECT FLOW OF MUD ONTO STREETS. PERIODIC TOP DRESSING WITH STONE WILL BE NECESSARY (KEEP SOME ON SITE).
6) ANY MATERIAL WHICH MAKES IT ONTO THE ROAD MUST BE CLEANED UP IMMEDIATELY.

STABILIZED CONSTRUCTION ENTRANCE

N.T.S.

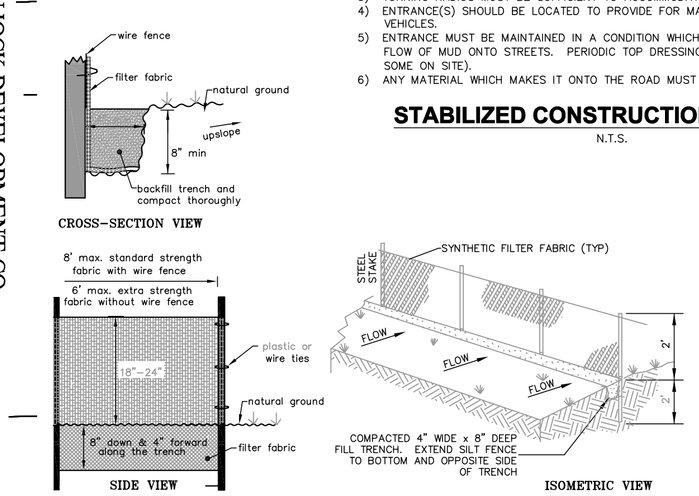

SILT FENCE DETAIL

N.T.S.

DATE: PAGE:

PIPE OUTLET TO FLAT AREA NO WELL-DEFINED CHANNEL

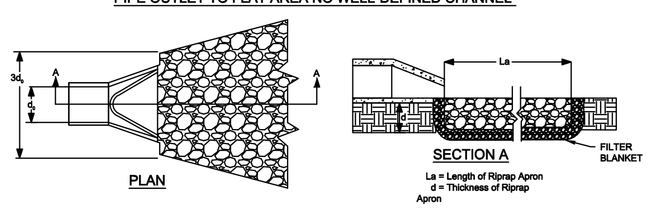

PIPE OUTLET TO WELL-DEFINED CHANNEL

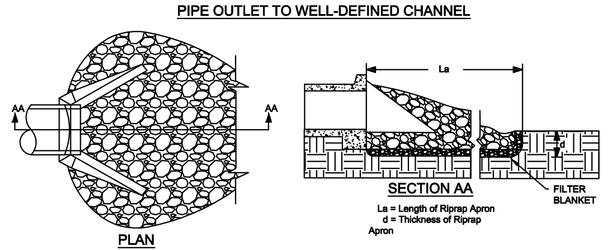

NOTES:

1. Compact any fill required in the subgrade to the density of the surrounding undisturbed material. Low areas in the subgrade on undisturbed soil may also be filled by increasing the riprap thickness.
2. The riprap and gravel filter must conform to the specified grading limits shown on the plans.
3. Filter cloth, when used, must meet design requirements, and be properly protected from punching or tearing during installation. Repair any damage by removing the riprap and placing another piece over the damaged area. If the damage is extensive, replace the entire filter cloth.
4. All connecting joints should overlap so the top layer is above the downstream layer a minimum of 1 foot.
5. The minimum thickness of the riprap should be 1.5 times the maximum stone diameter but not less than 6".
6. Riprap may be field stone or rough quarry stone. It should be hard, angular highly weather-resistant and well graded.
7. Construct the apron on zero grade with no overfill at the end. Make the top of the riprap at the downstream end level with the receiving area or slightly below it.
8. Ensure that the apron is properly aligned with the receiving stream and preferably straight throughout its length. If a curve is needed, place in the upper section of the apron.

MAINTENANCE:

1. Inspect outlet structures at least weekly and after each rainfall of 1.0 inch or greater.
2. Check outlets for erosion around or below riprap and for if stones have been dislodged. Make repairs immediately to prevent further damage.

DEQ

OUTLET STABILIZATION STRUCTURE

Effective Date: 9/1/2023
In accordance with the 2013 Design Manual Updates

P.O. Box 1129
4425 N. Croatan Hwy.
Kitty Hawk, N.C. 27949
(252)–261–4151
(252)–261–1333

Coastal ENGINEERING & SURVEYING, INC.
C–0836

Civil – Structural
Site Development

REVISIONS

NO.	DATE	DESCRIPTION	BY

SOIL EROSION & SEDIMENT CONTROL PLAN FOR:

COINJOCK MEADOWS, P.R.D., PHASE II (LOTS 29-36)

CRAWFORD TWSP. CURRITUCK COUNTY COINJOCK, NORTH CAROLINA

PARKER & ROSE INVESTMENTS, LLC

DATE: 10/29/2025	SCALE: 1"=50'
CHECKED: CFG	DRAWN: EG/VGA
PROJECT NO: P1093.24	
CAD FILE: P1093 E&SC	
SHEET: C6 OF C7	

CALL 811 BEFORE YOU DIG
811 SAFE DIGGING PARTNER

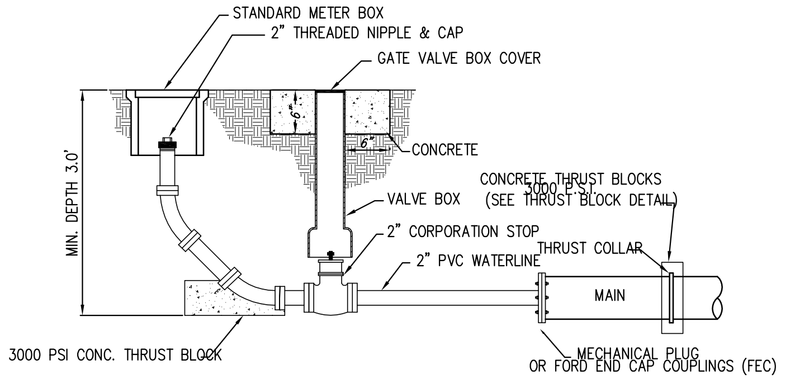

TYPICAL BLOW-OFF DETAIL
N.T.S

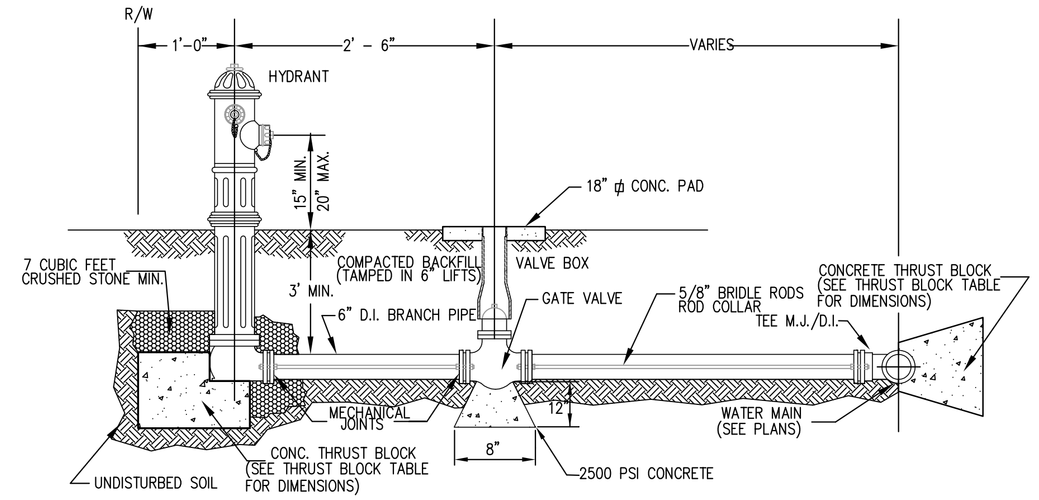

FIRE HYDRANT DETAIL
N.T.S

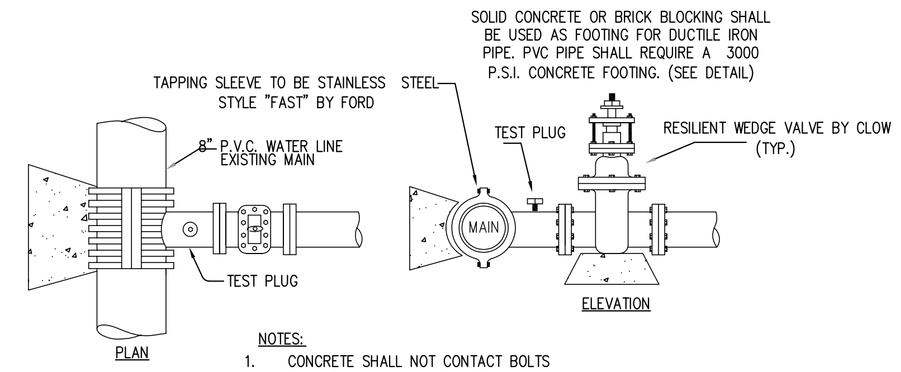

NOTES:
1. CONCRETE SHALL NOT CONTACT BOLTS OR ENDS OF MECHANICAL JOINT FITTINGS.
2. SEE STANDARD THRUST BLOCK TABLES FOR AREA OF CONCRETE REQUIRED.

TAPPING SLEEVE DETAIL
N.T.S

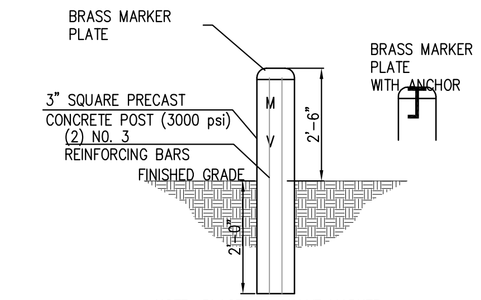

NOTE: PLACE ALL VALVE MARKER POSTS AT THE EDGE OF STREET R/W FOR ALL MAIN WATER VALVES.

VALVE MARKER DETAIL
N.T.S

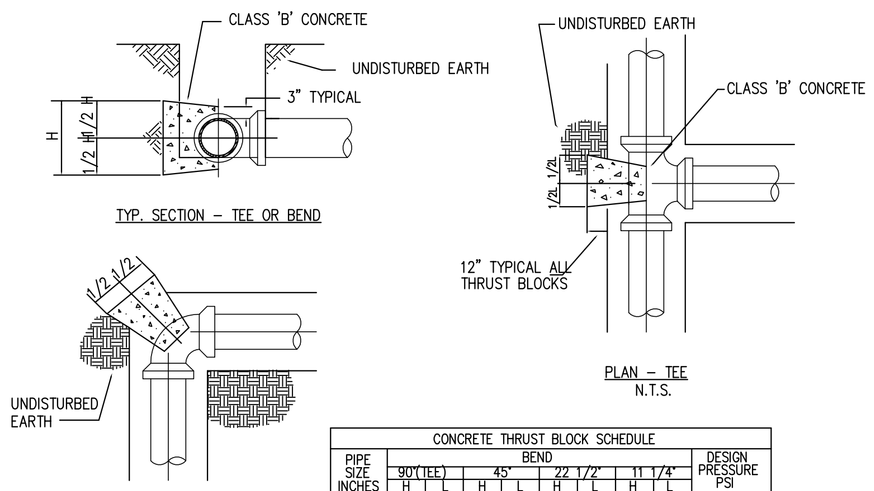

CONCRETE THRUST BLOCK SCHEDULE									
PIPE SIZE INCHES	BEND								DESIGN PRESSURE PSI
	90°(TEE)		45°		22 1/2°		11 1/4°		
	H	L	H	L	H	L	H	L	
2"–4"	1.0'	2.0'	1.0'	2.0'	1.0'	2.0'	1.0'	2.0'	150
6"–8"	2.0'	3.5'	2.0'	3.0'	2.0'	2.0'	2.0'	2.0'	150
10"–12"	3.0'	4.0'	3.0'	3.5'	2.0'	3.0'	2.0'	3.0'	150

THRUST BLOCKS
N.T.S

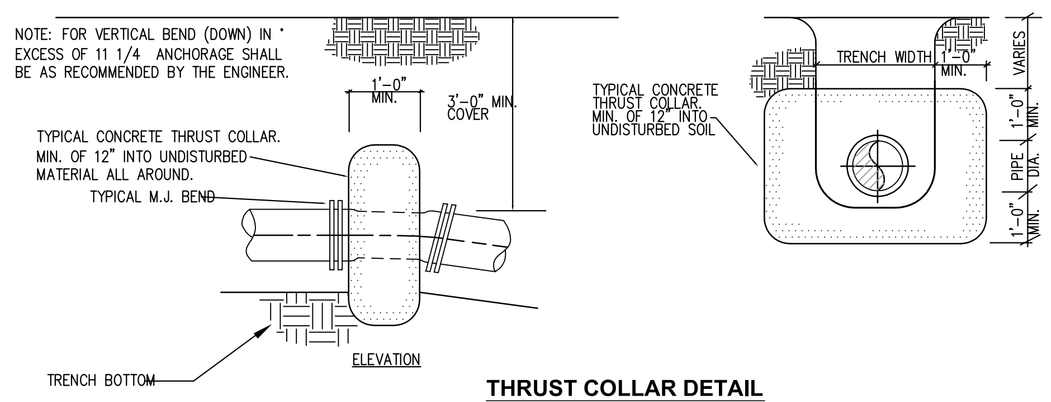

THRUST COLLAR DETAIL
N.T.S

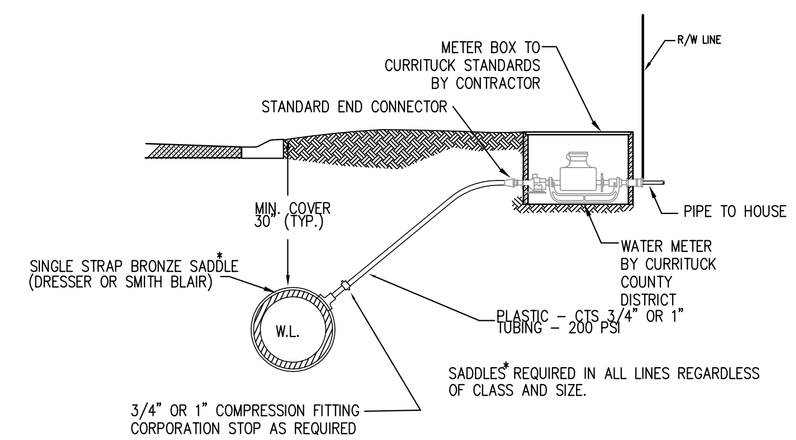

WATER SERVICE DETAIL
N.T.S

NOTE: – WHEN USING "SIAMESE WATER SERVICES" USE NO LESS THAN 1" P.E. TUBING, AND SPLIT WITH A 1"x3/4"x3/4" WYE.

– MIN. 5' SEPARATION BETWEEN WATER SERVICES

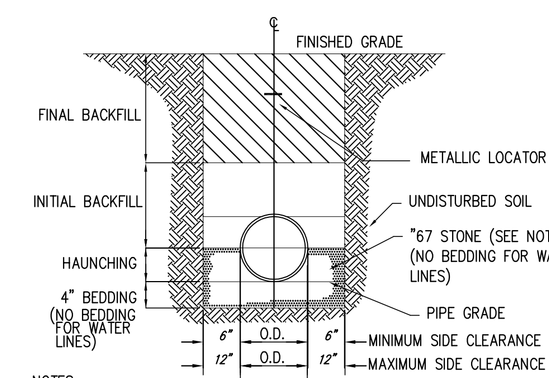

NOTES:
1. FOR TRENCHES REQUIRING SHORING AND BRACING, DIMENSIONS SHALL BE TAKEN FROM THE INSIDE FACE OF THE SHORING AND BRACING.
2. NO ROCKS OR BOULDERS 4" OR LARGER TO BE USED IN INITAL BACKFILL.
3. ALL BACKFILL MATERIAL SHALL BE SUITABLE NATIVE MATERIAL.
4. BACKFILL SHALL BE TAMPED IN 6" LAYERS IN TRAFFIC AREAS, 12" IN NON-TRAFFIC AREAS.
5. TO BE USED WITH PVC LINES.

TRENCH BOTTOM DIMENSIONS AND BACKFILLING REQUIREMENTS FOR PVC AND ABS
N.T.S

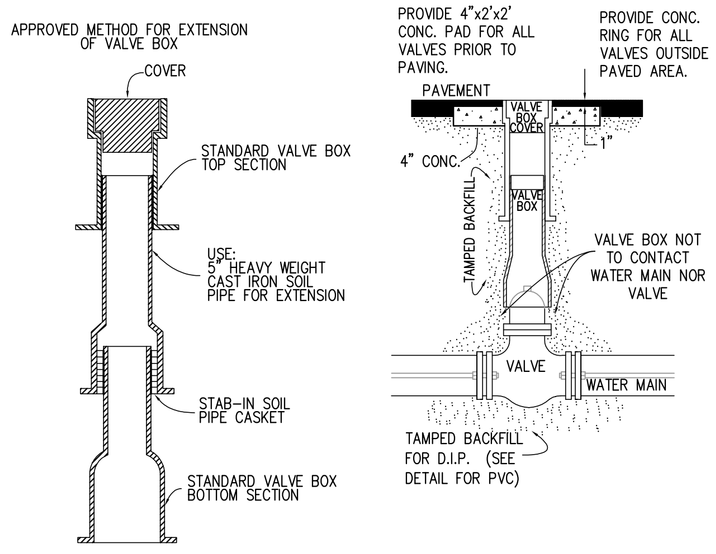

VALVE BOX INSTALLATION AND EXTENSION DETAIL
N.T.S

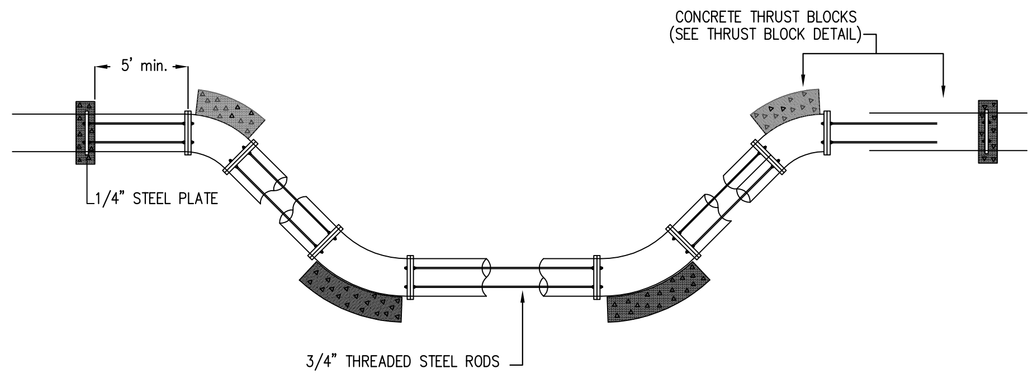

GENERAL NOTES
1. ONCE INSTALED AND TIGHT, THE STEEL RODS AND BOLTS SHALL BE COATED WITH 2 COATS OF BITUMINOUS BASE PAINT.
2. CONCRETE SHALL NOT CONTACT BOLTS OR ENDS OF MECHANICAL JOINT BENDS.
3. ROD REQUIREMENTS
   SIZE OF 45° BEND: 8" STATIC THRUST IN POUNDS: 7,694 # OF RODS REQUIRED: 2

STANDARD VERTICAL BEND
N.T.S

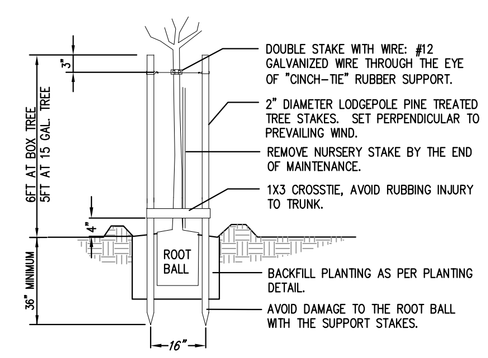

STAKING DETAIL
N.T.S

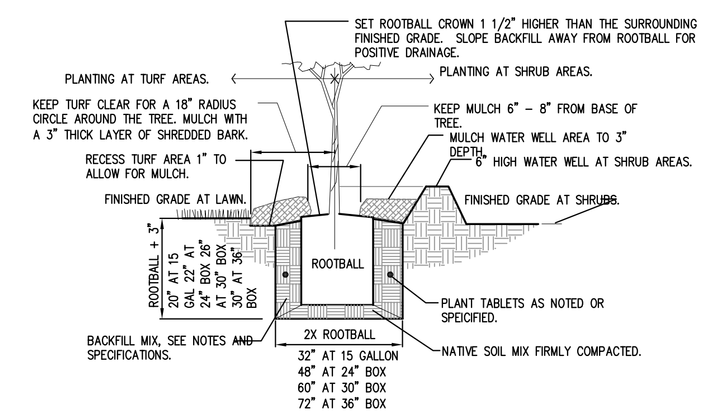

PLANT PIT DETAIL
N.T.S

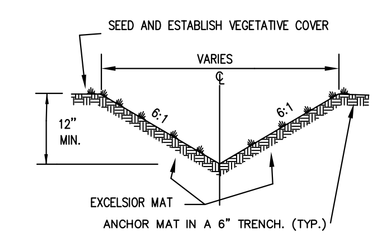

PROPERTY LINE SWALE DETAIL
N.T.S

Note: Join mat strips by anchoring with staples and overlapping 18" minimum.

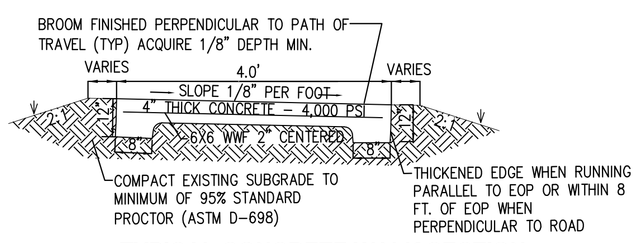

TYPICAL CONCRETE WALK SECTION
N.T.S

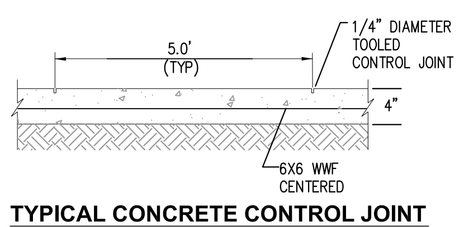

TYPICAL CONCRETE CONTROL JOINT
N.T.S

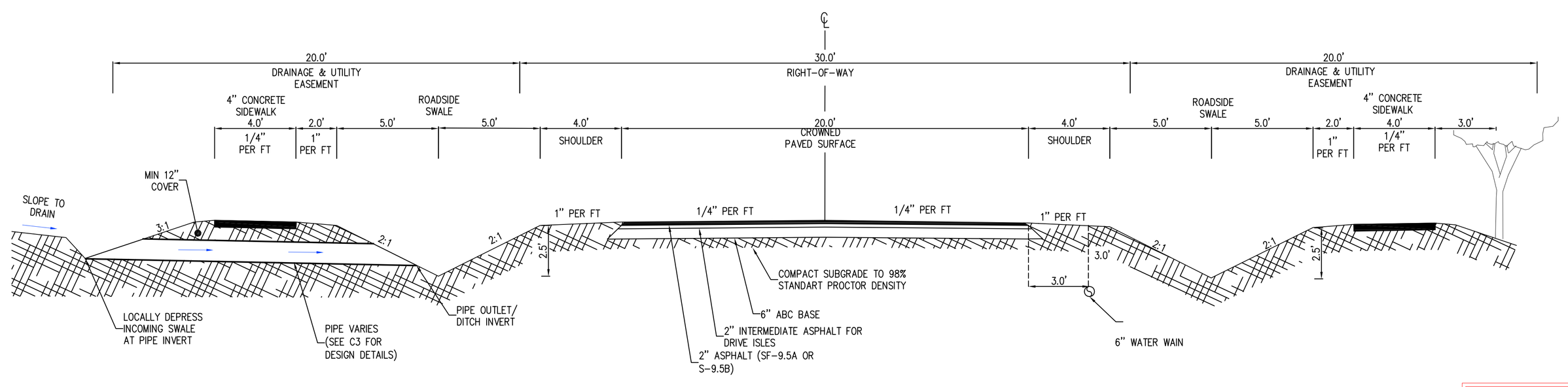

TYPICAL STREET CROSS SECTION
N.T.S

PRELIMINARY
FOR REVIEW PURPOSES ONLY
12.11.25 VGA

P.O. Box 1129
4425 N. Croatan Hwy.
Kitty Hawk, N.C. 27949
(252)-261-4151
(252)-261-1333
Civil – Structural
Site Development
Coastal ENGINEERING & SURVEYING, INC.
C-0836

REVISIONS

NO.	DATE	DESCRIPTION	BY

CONSTRUCTION DETAILS FOR:
COINJOCK MEADOWS, P.R.D., PHASE II (LOTS 29-36)
POPLAR BRANCH TWSP. CURRITUCK COUNTY COINOCK, NORTH CAROLINA
PARKER & ROSE INVESTMENTS, LLC

DATE: 09/30/2025	SCALE: N.T.S.
CHECKED: CFG	DRAWN: EG/VGA/JCB
PROJECT NO: P1093.24	
CAD FILE: P1093 E&SC DETAILS	
SHEET: C7 OF C7	

Z:\Projects\P1000 - P1099\P1093.24 - Coinjock Meadows\dwg\PLANS FOR SUBMITTAL 12.10.25\C7 CONSTRUCTION DETAILS.dwg, 12/11/2025 5:58:10 PM